Adaptive Control of nth order plants - with single input

Plant: $\dot{X}_p = A_p X_p + b_p u,$

Adaptive Control of nth order plants - with single input

$$\begin{aligned} \text{Plant:} \quad \dot{X}_p &= A_p X_p + b_p u, A_p \in \mathbb{R}^{n \times n}, b_p \in \mathbb{R}^n, u \in \mathbb{R} \\ \text{Controller:} \quad u &= \theta_c^T X_p + k_c r \end{aligned}$$

Adaptive Control of nth order plants - with single input

$$
\begin{aligned}
\text{Plant:} \quad \dot{X}_p &= A_p X_p + b_p u, A_p \in \mathbb{R}^{n\times n}, b_p \in \mathbb{R}^n, u \in \mathbb{R} \\
\text{Controller:} \quad u &= \theta_c^T X_p + k_c r \\
\text{Closed-loop:} \quad \dot{X}_p &= \left[A_p + b_p \theta_c^T\right] X_p + b_p k_c r
\end{aligned}
$$

Adaptive Control of nth order plants - with single input

$$
\begin{aligned}
\text{Plant:} \quad \dot{X}_p &= A_p X_p + b_p u, A_p \in \mathbb{R}^{n\times n}, b_p \in \mathbb{R}^n, u \in \mathbb{R} \\
\text{Controller:} \quad u &= \theta_c^T X_p + k_c r \\
\text{Closed-loop:} \quad \dot{X}_p &= \left[A_p + b_p \theta_c^T\right] X_p + b_p k_c r
\end{aligned}
$$

Matching conditions: $A_p + b_p \theta^{*T} = A_m;\ b_p k^* = b_m$

Adaptive Control of nth order plants - with single input

$$
\begin{aligned}
\text{Plant:} \quad \dot{X}_p &= A_p X_p + b_p u, A_p \in \mathbb{R}^{n\times n}, b_p \in \mathbb{R}^n, u \in \mathbb{R} \\
\text{Controller:} \quad u &= \theta_c^T X_p + k_c r \\
\text{Closed-loop:} \quad \dot{X}_p &= \left[A_p + b_p \theta_c^T\right] X_p + b_p k_c r
\end{aligned}
$$

Matching conditions: $A_p + b_p \theta^{*T} = A_m;\ b_p k^* = b_m$

Reference Model $\dot{X}_m = A_m X_m + b_m r$

Adaptive Control of nth order plants - with single input

$$
\begin{aligned}
\text{Plant:} \quad \dot{X}_p &= A_p X_p + b_p u, A_p \in \mathbb{R}^{n\times n}, b_p \in \mathbb{R}^n, u \in \mathbb{R} \\
\text{Controller:} \quad u &= \theta_c^T X_p + k_c r \\
\text{Closed-loop:} \quad \dot{X}_p &= \left[A_p + b_p \theta_c^T\right] X_p + b_p k_c r
\end{aligned}
$$

Matching conditions: $A_p + b_p \theta^{*T} = A_m;\ b_p k^* = b_m$

Reference Model $\dot{X}_m = A_m X_m + b_m r$

Solution: $\theta_c = \theta^*, \quad k_c = k^*$

Adaptive Control of nth order plants - with single input

$$
\begin{aligned}
\text{Plant:} \quad \dot{X}_p &= A_p X_p + b_p u, A_p \in \mathbb{R}^{n\times n}, b_p \in \mathbb{R}^n, u \in \mathbb{R} \\
\text{Controller:} \quad u &= \theta_c^T X_p + k_c r \\
\text{Closed-loop:} \quad \dot{X}_p &= \left[A_p + b_p \theta_c^T\right] X_p + b_p k_c r
\end{aligned}
$$

Matching conditions: $A_p + b_p \theta^{*T} = A_m;\ b_p k^* = b_m$

Reference Model $\dot{X}_m = A_m X_m + b_m r$

Solution: $\theta_c = \theta^*, \quad k_c = k^*$

$$A_p, b_p \text{ unknown} \implies \theta^*, k^* \text{ unknown}$$

Choose Controller: $u = \theta^T(t) X_p + k(t) r$

Adaptive Control of nth order plants - with single input

$$
\begin{aligned}
\text{Plant:} \quad \dot{X}_p &= A_p X_p + b_p u, A_p \in \mathbb{R}^{n\times n}, b_p \in \mathbb{R}^n, u \in \mathbb{R} \\
\text{Controller:} \quad u &= \theta_c^T X_p + k_c r \\
\text{Closed-loop:} \quad \dot{X}_p &= \left[A_p + b_p \theta_c^T\right] X_p + b_p k_c r
\end{aligned}
$$

Matching conditions: $A_p + b_p \theta^{*T} = A_m;\ b_p k^* = b_m$

Reference Model $\dot{X}_m = A_m X_m + b_m r$

Solution: $\theta_c = \theta^*, \quad k_c = k^*$

$$A_p, b_p \text{ unknown} \implies \theta^*, k^* \text{ unknown}$$

$$
\begin{aligned}
\text{Choose Controller:} \quad u &= \theta^T(t) X_p + k(t) r \\
\text{Closed-loop:} \quad \dot{X}_p &= \left[A_p + b_p \theta^T(t)\right] X_p + b_p (k^* + \widetilde{k}) r
\end{aligned}
$$

Adaptive Control of nth order plants - with single input

$$
\begin{aligned}
\text{Plant:} \quad \dot{X}_p &= A_p X_p + b_p u, A_p \in \mathbb{R}^{n\times n}, b_p \in \mathbb{R}^n, u \in \mathbb{R} \\
\text{Controller:} \quad u &= \theta_c^T X_p + k_c r \\
\text{Closed-loop:} \quad \dot{X}_p &= \left[A_p + b_p \theta_c^T\right] X_p + b_p k_c r
\end{aligned}
$$

Matching conditions: $A_p + b_p \theta^{*T} = A_m;\ b_p k^* = b_m$

Reference Model $\dot{X}_m = A_m X_m + b_m r$

Solution: $\theta_c = \theta^*, \quad k_c = k^*$

$$A_p, b_p \text{ unknown} \implies \theta^*, k^* \text{ unknown}$$

$$
\begin{aligned}
\text{Choose Controller:} \quad u &= \theta^T(t) X_p + k(t) r \\
\text{Closed-loop:} \quad \dot{X}_p &= \left[A_p + b_p \theta^T(t)\right] X_p + b_p (k^* + \widetilde{k}) r \\
&= A_m X_p + b_p \left(\widetilde{\theta}^T X_p + \widetilde{k} r\right) + b_m r
\end{aligned}
$$

Error Model 2 and Stability Analysis

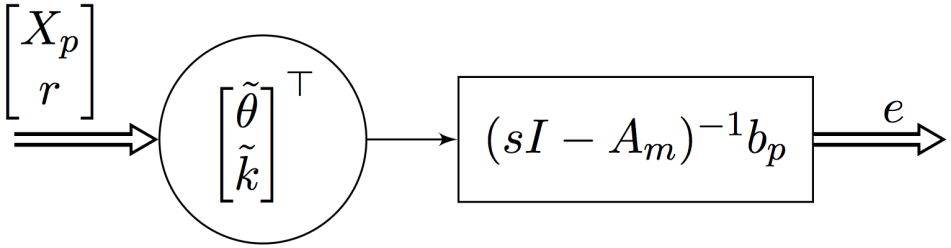

Error equation: $\dot{e} = A_m e + b_p \left(\widetilde{\theta}^T X_p + \widetilde{k} r \right)$

Error Model 2 and Stability Analysis

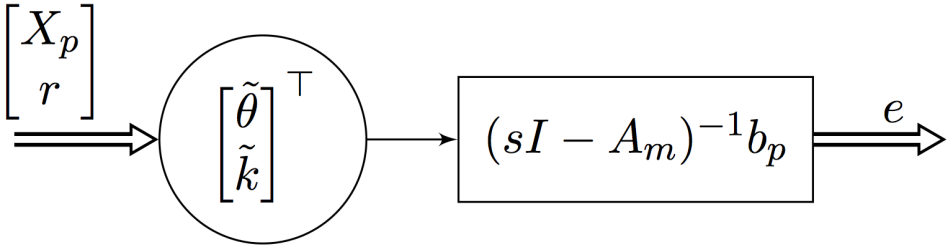

Error equation: $\dot{e} = A_m e + b_p \left(\widetilde{\theta}^T X_p + \widetilde{k} r \right)$

$$V = e^T P e + |k^*| \left(\widetilde{\theta}^T \widetilde{\theta} + \widetilde{k}^2 \right)$$

Error Model 2 and Stability Analysis

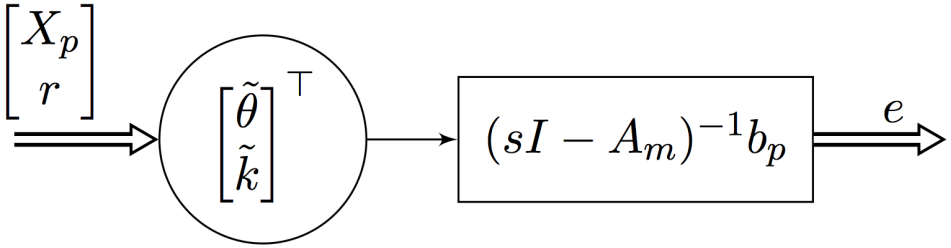

Error equation: $\dot{e} = A_m e + b_p \left(\widetilde{\theta}^T X_p + \widetilde{k} r \right)$

$$
\begin{aligned}
V &= e^T P e + |k^*| \left(\widetilde{\theta}^T \widetilde{\theta} + \widetilde{k}^2 \right) \\
\dot{V} &= e^T [A_m^T P + P A_m] e + 2 e^T P b_p \, \widetilde{\theta}^T X_p + 2 |k^*| \widetilde{\theta}^T \dot{\widetilde{\theta}} \\
&\qquad + 2 e^T P b_p \, \widetilde{k} r + 2 |k^*| \widetilde{k} \dot{\widetilde{k}} \\
&= -e^T Q e \\
\text{if } \dot{\widetilde{\theta}} &= -sign(k^*) e^T P b_m \, X_p, \; \dot{\widetilde{k}} = -sign(k^*) e^T P b_m \, r
\end{aligned}
$$

$\Rightarrow e(t), \widetilde{\theta}(t),$ and $\widetilde{k}(t)$ are bounded for all $t \geq t_0$

Error Model 2 and Stability Analysis

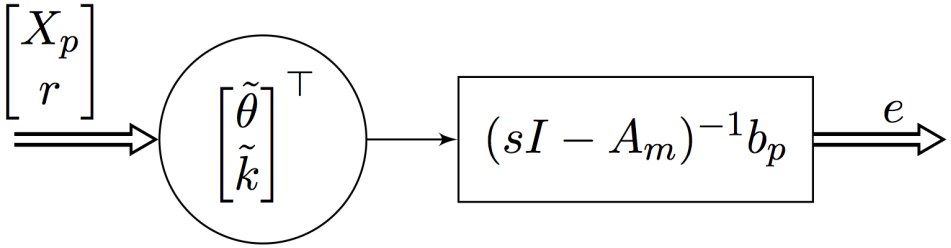

Error equation: $\dot{e} = A_m e + b_p \left(\widetilde{\theta}^T X_p + \widetilde{k} r \right)$

$$
\begin{aligned}
V &= e^T P e + |k^*| \left(\widetilde{\theta}^T \widetilde{\theta} + \widetilde{k}^2 \right) \\
\dot{V} &= e^T [A_m^T P + P A_m] e + 2 e^T P b_p \, \widetilde{\theta}^T X_p + 2 |k^*| \widetilde{\theta}^T \dot{\widetilde{\theta}} \\
&\qquad + 2 e^T P b_p \, \widetilde{k} r + 2 |k^*| \widetilde{k} \dot{\widetilde{k}} \\
&= -e^T Q e \\
\text{if } \dot{\widetilde{\theta}} &= -sign(k^*) e^T P b_m \, X_p, \; \dot{\widetilde{k}} = -sign(k^*) e^T P b_m \, r
\end{aligned}
$$

$\Rightarrow e(t), \widetilde{\theta}(t),$ and $\widetilde{k}(t)$ are bounded for all $t \geq t_0$

$\lim_{t \to \infty} e(t) = 0$ from Barbalat's Lemma

Lyapunov functions and Linear Time-invariant Systems

LTI System: $\dot{x} = A_m x$

Lyapunov functions and Linear Time-invariant Systems

$$\text{LTI System:} \quad \dot{x} = \quad A_m x$$

Theorem: Given $Q = Q^T > 0$, there exists $P = P^T > 0$ that solves

$$A_m^T P + P A_m = -Q$$

if and only if A_m is a Hurwitz matrix.

Lyapunov functions and Linear Time-invariant Systems

$$\text{LTI System:} \quad \dot{x} = \quad A_m x$$

Theorem: Given $Q = Q^T > 0$, there exists $P = P^T > 0$ that solves

$$A_m^T P + P A_m = -Q$$

if and only if A_m is a Hurwitz matrix.

Main implication:

$$V \quad = \quad x^T P x$$

Lyapunov functions and Linear Time-invariant Systems

$$\text{LTI System:} \quad \dot{x} = \quad A_m x$$

Theorem: Given $Q = Q^T > 0$, there exists $P = P^T > 0$ that solves

$$A_m^T P + P A_m = -Q$$

if and only if A_m is a Hurwitz matrix.

Main implication:

$$\begin{aligned} V &= x^T P x \\ \dot{V} &= x^T [A_m^T P + P A_m] x \end{aligned}$$

Lyapunov functions and Linear Time-invariant Systems

$$\text{LTI System:} \quad \dot{x} = \quad A_m x$$

Theorem: Given $Q = Q^T > 0$, there exists $P = P^T > 0$ that solves

$$A_m^T P + P A_m = -Q$$

if and only if A_m is a Hurwitz matrix.

Main implication:

$$\begin{aligned} V &= x^T P x \\ \dot{V} &= x^T [A_m^T P + P A_m] x \\ &= -x^T Q x < 0 \end{aligned}$$

Overall Adaptive System - single input

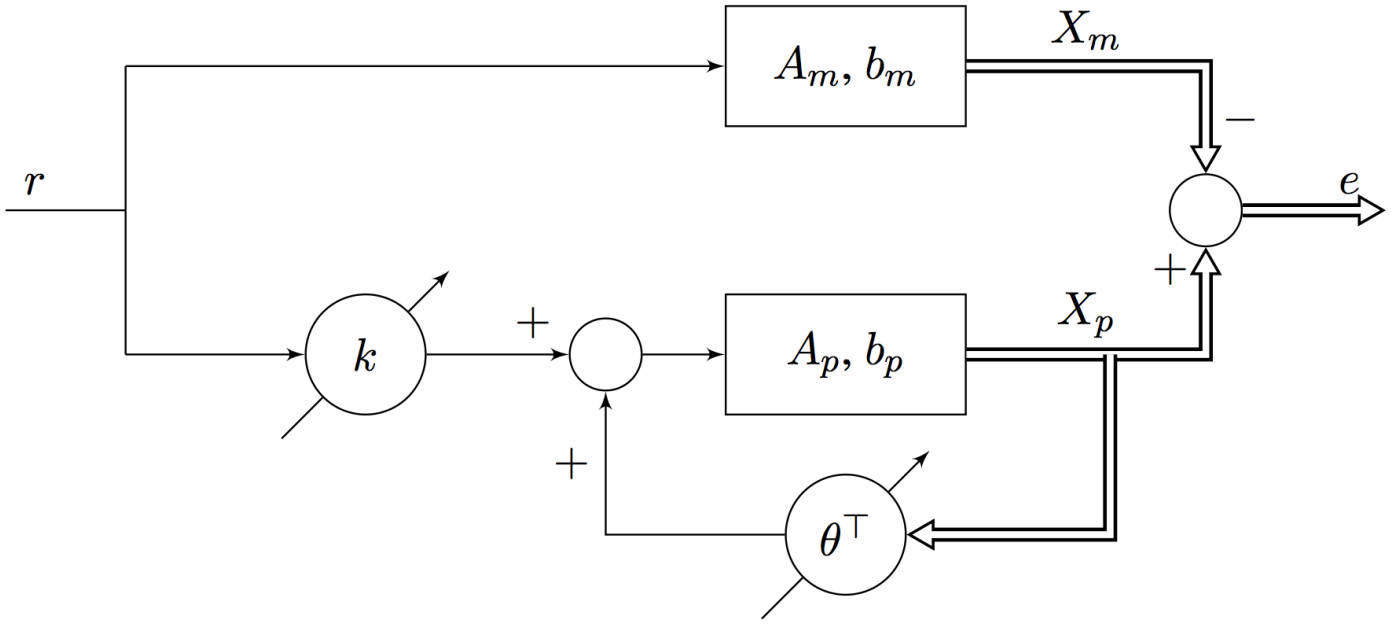

Assumption: θ^* and k^* exist such that

$$b_p k^* = b_m \qquad A_p + b_p \theta^{*\top} = A_m$$

$$\begin{aligned} \dot{\theta} &= -sign(k^*) e^\top P b_m X_p \\ \dot{k} &= -sign(k^*) e^\top P b_m r \end{aligned} \quad \Rightarrow \text{Stability, } e(t) \to 0$$

Adaptive Control of nth order plants - with multiple inputs

$$\text{Plant:} \quad \dot{X}_p = A_p X_p + B_p u,$$

$$A_p \in \mathbb{R}^{n \times n}, \qquad B_p \in \mathbb{R}^{n \times m}, \qquad u \in \mathbb{R}^m$$

Adaptive Control of nth order plants - with multiple inputs

$$\begin{aligned} \text{Plant:} \quad \dot{X}_p &= A_p X_p + B_p u, \\ A_p \in \mathbb{R}^{n\times n}, \qquad & B_p \in \mathbb{R}^{n\times m}, \qquad u \in \mathbb{R}^m \end{aligned}$$

$$\begin{aligned} \text{Controller:} \quad u &= \Theta_{Ac} X_p + \Theta_{Bc} r \\ \text{Closed-loop:} \quad \dot{X}_p &= \left[A_p + B_p \Theta_{Ac}\right] X_p + B_p \Theta_{Bc} r \end{aligned}$$

Adaptive Control of nth order plants - with multiple inputs

$$\text{Plant:} \quad \dot{X}_p = A_p X_p + B_p u,$$

$$A_p \in \mathbb{R}^{n\times n}, \qquad B_p \in \mathbb{R}^{n\times m}, \qquad u \in \mathbb{R}^m$$

$$\text{Controller:} \quad u = \Theta_{Ac} X_p + \Theta_{Bc} r$$

$$\text{Closed-loop:} \quad \dot{X}_p = \left[A_p + B_p \Theta_{Ac}\right] X_p + B_p \Theta_{Bc} r$$

$$\text{Matching conditions:} \quad A_p + B_p \Theta_A^* = A_m; \; B_p \Theta_B^* = B_m$$

Adaptive Control of nth order plants - with multiple inputs

$$\text{Plant:} \quad \dot{X}_p = A_p X_p + B_p u,$$

$$A_p \in \mathbb{R}^{n\times n}, \qquad B_p \in \mathbb{R}^{n\times m}, \qquad u \in \mathbb{R}^m$$

$$\text{Controller:} \quad u = \Theta_{Ac} X_p + \Theta_{Bc} r$$

$$\text{Closed-loop:} \quad \dot{X}_p = \left[A_p + B_p \Theta_{Ac}\right] X_p + B_p \Theta_{Bc} r$$

$$\text{Matching conditions:} \quad A_p + B_p \Theta_A^* = A_m; \; B_p \Theta_B^* = B_m$$

$$\text{Reference Model} \quad \dot{X}_m = A_m X_m + B_m r$$

Adaptive Control of nth order plants - with multiple inputs

$$\text{Plant:} \quad \dot{X}_p = A_p X_p + B_p u,$$

$$A_p \in \mathbb{R}^{n\times n}, \qquad B_p \in \mathbb{R}^{n\times m}, \qquad u \in \mathbb{R}^m$$

$$\text{Controller:} \quad u = \Theta_{Ac} X_p + \Theta_{Bc} r$$

$$\text{Closed-loop:} \quad \dot{X}_p = \left[A_p + B_p \Theta_{Ac}\right] X_p + B_p \Theta_{Bc} r$$

$$\text{Matching conditions:} \quad A_p + B_p \Theta_A^* = A_m; \; B_p \Theta_B^* = B_m$$

$$\text{Reference Model} \quad \dot{X}_m = A_m X_m + B_m r$$

$$\text{Solution:} \quad \Theta_{Ac} = \Theta_A^*, \;\; \Theta_{Bc} = \Theta_B^*$$

Adaptive Control of nth order plants - with multiple inputs

$$\text{Plant:} \quad \dot{X}_p = A_p X_p + B_p u,$$

$$A_p \in \mathbb{R}^{n\times n}, \qquad B_p \in \mathbb{R}^{n\times m}, \qquad u \in \mathbb{R}^m$$

$$\text{Controller:} \quad u = \Theta_{Ac} X_p + \Theta_{Bc} r$$

$$\text{Closed-loop:} \quad \dot{X}_p = \left[A_p + B_p \Theta_{Ac}\right] X_p + B_p \Theta_{Bc} r$$

$$\text{Matching conditions:} \quad A_p + B_p \Theta_A^* = A_m; \; B_p \Theta_B^* = B_m$$

$$\text{Reference Model} \quad \dot{X}_m = A_m X_m + B_m r$$

$$\text{Solution:} \quad \Theta_{Ac} = \Theta_A^*, \;\; \Theta_{Bc} = \Theta_B^*$$

$$\Theta_A^* \in \mathbb{R}^{m\times n}, \qquad \Theta_B^* \in \mathbb{R}^{m\times m}$$

$$A_p, B_p \text{ unknown} \implies \Theta_A^*, \Theta_B^* \text{ unknown}$$

Adaptive Control of nth order plants - with multiple inputs; B_p known

$$\begin{aligned} \text{Plant:} \quad \dot{X}_p &= A_p X_p + B_p u \\ \text{Choose Controller:} \quad u &= \Theta_A(t) X_p + \Theta_B^* r \end{aligned}$$

Adaptive Control of nth order plants - with multiple inputs; B_p known

$$
\begin{aligned}
\text{Plant:} \quad \dot{X}_p &= A_p X_p + B_p u \\
\text{Choose Controller:} \quad u &= \Theta_A(t) X_p + \Theta_B^* r \\
\text{Closed-loop:} \quad \dot{X}_p &= \left[A_p + B_p \Theta_A(t)\right] X_p + B_p \Theta_B^* r
\end{aligned}
$$

Adaptive Control of nth order plants - with multiple inputs; B_p known

$$\begin{aligned}
\text{Plant:} \quad \dot{X}_p &= A_p X_p + B_p u \\
\text{Choose Controller:} \quad u &= \Theta_A(t) X_p + \Theta_B^* r \\
\text{Closed-loop:} \quad \dot{X}_p &= \left[A_p + B_p \Theta_A(t)\right] X_p + B_p \Theta_B^* r
\end{aligned}$$

$$A_p + B_p \Theta_A^* = A_m; \;\; B_p \Theta_B^* = B_m, \;\; \widetilde{\Theta}_A = \Theta_A - \Theta_A^*$$

Adaptive Control of nth order plants - with multiple inputs; B_p known

$$
\begin{aligned}
\text{Plant:} \quad \dot{X}_p &= A_p X_p + B_p u \\
\text{Choose Controller:} \quad u &= \Theta_A(t) X_p + \Theta_B^* r \\
\text{Closed-loop:} \quad \dot{X}_p &= \left[A_p + B_p \Theta_A(t)\right] X_p + B_p \Theta_B^* r
\end{aligned}
$$

$$
\begin{aligned}
A_p + B_p \Theta_A^* &= A_m; \;\; B_p \Theta_B^* = B_m, \;\; \widetilde{\Theta}_A = \Theta_A - \Theta_A^* \\
\dot{X}_p &= A_m X_p + B_p \widetilde{\Theta}_A X_p + B_m r
\end{aligned}
$$

Adaptive Control of nth order plants - with multiple inputs; B_p known

$$
\begin{aligned}
\text{Plant:} \quad \dot{X}_p &= A_p X_p + B_p u \\
\text{Choose Controller:} \quad u &= \Theta_A(t) X_p + \Theta_B^* r \\
\text{Closed-loop:} \quad \dot{X}_p &= \left[A_p + B_p \Theta_A(t)\right] X_p + B_p \Theta_B^* r
\end{aligned}
$$

$$
\begin{aligned}
A_p + B_p \Theta_A^* &= A_m; \;\; B_p \Theta_B^* = B_m, \;\; \widetilde{\Theta}_A = \Theta_A - \Theta_A^* \\
\dot{X}_p &= A_m X_p + B_p \widetilde{\Theta}_A X_p + B_m r \\
\text{Reference Model} \quad & \dot{X}_m = A_m X_m + B_m r
\end{aligned}
$$

Adaptive Control of nth order plants - with multiple inputs; B_p known

$$
\begin{aligned}
\text{Plant:} \quad \dot{X}_p &= A_p X_p + B_p u \\
\text{Choose Controller:} \quad u &= \Theta_A(t) X_p + \Theta_B^* r \\
\text{Closed-loop:} \quad \dot{X}_p &= \left[A_p + B_p \Theta_A(t)\right] X_p + B_p \Theta_B^* r
\end{aligned}
$$

$$
\begin{aligned}
A_p + B_p \Theta_A^* &= A_m; \;\; B_p \Theta_B^* = B_m, \;\; \widetilde{\Theta}_A = \Theta_A - \Theta_A^* \\
\dot{X}_p &= A_m X_p + B_p \widetilde{\Theta}_A X_p + B_m r
\end{aligned}
$$

Reference Model $\quad \dot{X}_m = A_m X_m + B_m r$

Error Model $\quad \dot{e} = A_m e + B_p \widetilde{\Theta}_A X_p$

Reading: 3.4, 2.4.4

Error Model 2 and Stability Analysis

Error equation: $\dot{e} \quad = \quad A_m e + B_p \widetilde{\Theta}_A X_p$

Error Model 2 and Stability Analysis

$$\text{Error equation: } \dot{e} = A_m e + B_p \widetilde{\Theta}_A X_p$$
$$\widetilde{\Theta}_A \in \mathbb{R}^{m \times n}$$

Error Model 2 and Stability Analysis

$$\begin{aligned} \text{Error equation: } \dot{e} &= A_m e + B_p \widetilde{\Theta}_A X_p \\ \widetilde{\Theta}_A &\in \mathbb{R}^{m \times n} \\ \text{Use of } Trace & \quad \text{operator: converts matrices to scalars.} \end{aligned}$$

Error Model 2 and Stability Analysis

$$\begin{aligned}
\text{Error equation: } \dot{e} &= A_m e + B_p \widetilde{\Theta}_A X_p \\
\widetilde{\Theta}_A &\in \mathbb{R}^{m \times n} \\
\text{Use of } Trace & \quad \text{operator: converts matrices to scalars.} \\
Trace(ab^T) &= b^T a, \quad a, b \in \mathbb{R}^n
\end{aligned}$$

Error Model 2 and Stability Analysis

$$\begin{aligned}
\text{Error equation: } \dot{e} &= A_m e + B_p \widetilde{\Theta}_A X_p \\
\widetilde{\Theta}_A &\in \mathbb{R}^{m \times n} \\
\text{Use of } Trace & \quad \text{operator: converts matrices to scalars.} \\
Trace(ab^T) &= b^T a, \quad a, b \in \mathbb{R}^n \\
V &= e^T P e + Tr\left(\widetilde{\Theta}_A^T \widetilde{\Theta}_A\right)
\end{aligned}$$

Error Model 2 and Stability Analysis

$$
\begin{aligned}
\text{Error equation: } \dot{e} &= A_m e + B_p \widetilde{\Theta}_A X_p \\
\widetilde{\Theta}_A &\in \mathbb{R}^{m \times n} \\
\text{Use of } Trace & \quad \text{operator: converts matrices to scalars.} \\
Trace(ab^T) &= b^T a, \quad a, b \in \mathbb{R}^n \\
V &= e^T P e + Tr\left(\widetilde{\Theta}_A^T \widetilde{\Theta}_A\right) \\
\dot{V} &= e^T [A_m^T P + P A_m] e + 2 e^T P B_p \, \widetilde{\Theta}_A X_p + 2 Tr\left(\widetilde{\Theta}_A^T \dot{\widetilde{\Theta}}_A\right) \\
\text{Choose } \dot{\widetilde{\Theta}}_A &= -B_p^T P e \, X_p^T \\
\dot{V} &= -e^T Q e \leq 0
\end{aligned}
$$

Error Model 2 and Stability Analysis

$$
\begin{aligned}
\text{Error equation: } \dot{e} &= A_m e + B_p \widetilde{\Theta}_A X_p \\
\widetilde{\Theta}_A &\in \mathbb{R}^{m \times n} \\
\text{Use of } Trace & \quad \text{operator: converts matrices to scalars.} \\
Trace(ab^T) &= b^T a, \quad a, b \in \mathbb{R}^n \\
V &= e^T P e + Tr\left(\widetilde{\Theta}_A^T \widetilde{\Theta}_A\right) \\
\dot{V} &= e^T [A_m^T P + P A_m] e + 2 e^T P B_p \, \widetilde{\Theta}_A X_p + 2 Tr\left(\widetilde{\Theta}_A^T \dot{\widetilde{\Theta}}_A\right) \\
\text{Choose } \dot{\widetilde{\Theta}}_A &= -B_p^T P e \, X_p^T \\
\dot{V} &= -e^T Q e \leq 0 \\
\Rightarrow e(t) & \quad \text{and} \quad \widetilde{\Theta}_A(t) \text{ are bounded for all } t \geq t_0
\end{aligned}
$$

Error Model 2 and Stability Analysis

$$
\begin{aligned}
\text{Error equation: } \dot{e} &= A_m e + B_p \widetilde{\Theta}_A X_p \\
\widetilde{\Theta}_A &\in \mathbb{R}^{m \times n} \\
\text{Use of } Trace & \quad \text{operator: converts matrices to scalars.} \\
Trace(ab^T) &= b^T a, \quad a, b \in \mathbb{R}^n \\
V &= e^T P e + Tr\left(\widetilde{\Theta}_A^T \widetilde{\Theta}_A\right) \\
\dot{V} &= e^T [A_m^T P + P A_m] e + 2 e^T P B_p \, \widetilde{\Theta}_A X_p + 2 Tr\left(\widetilde{\Theta}_A^T \dot{\widetilde{\Theta}}_A\right) \\
\text{Choose } \dot{\widetilde{\Theta}}_A &= -B_p^T P e \, X_p^T \\
\dot{V} &= -e^T Q e \leq 0 \\
\Rightarrow e(t) & \quad \text{and} \quad \widetilde{\Theta}_A(t) \text{ are bounded for all } t \geq t_0 \\
\lim_{t \to \infty} e(t) &= 0 \text{ from Barbalat's Lemma}
\end{aligned}
$$