2.153 Adaptive Control
Fall 2019
Lecture 21: Adaptive Control: $n^* \geq 2$

Anuradha Annaswamy

aanna@mit.edu

November 17, 2019

Adaptive Control using Output Feedback

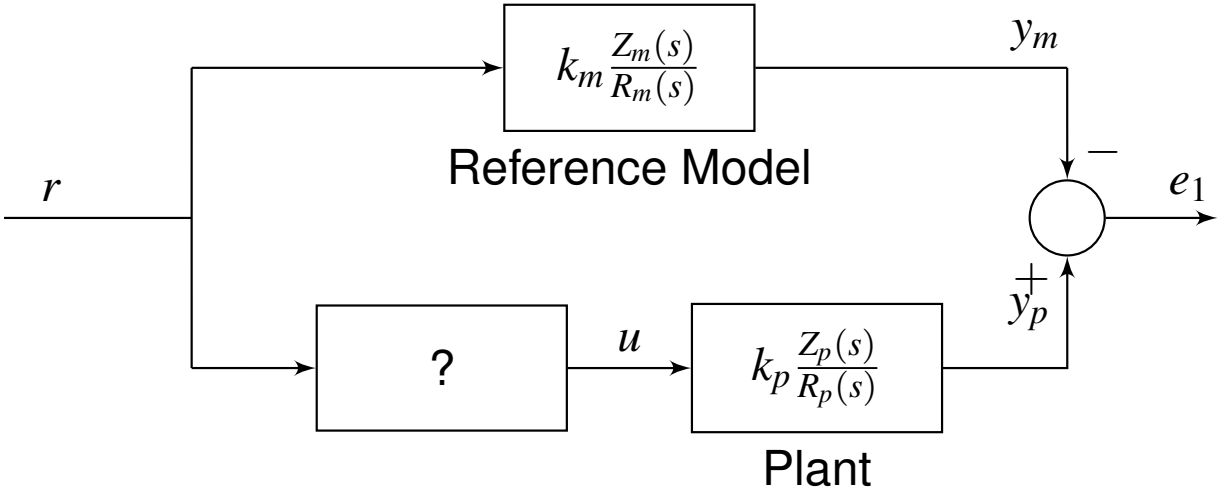

Goal: Choose u so that $e_1(t)$ tends to zero asymptotically.

Adaptive Control using Output Feedback

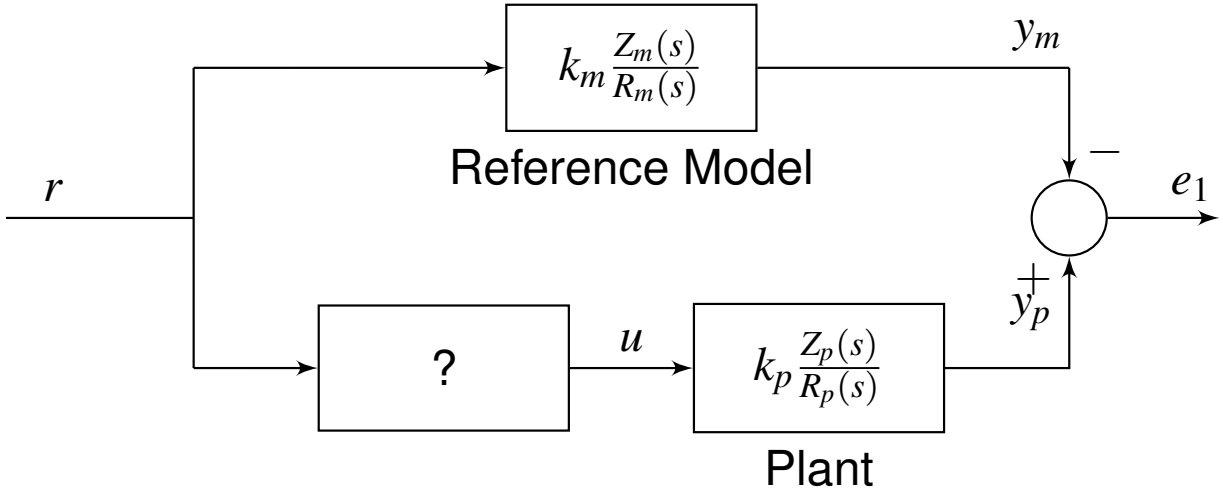

Goal: Choose u so that $e_1(t)$ tends to zero asymptotically. k_p and coefficients of $R_p(s)$ and $Z_p(s)$ are unknown.

Adaptive Control using Output Feedback

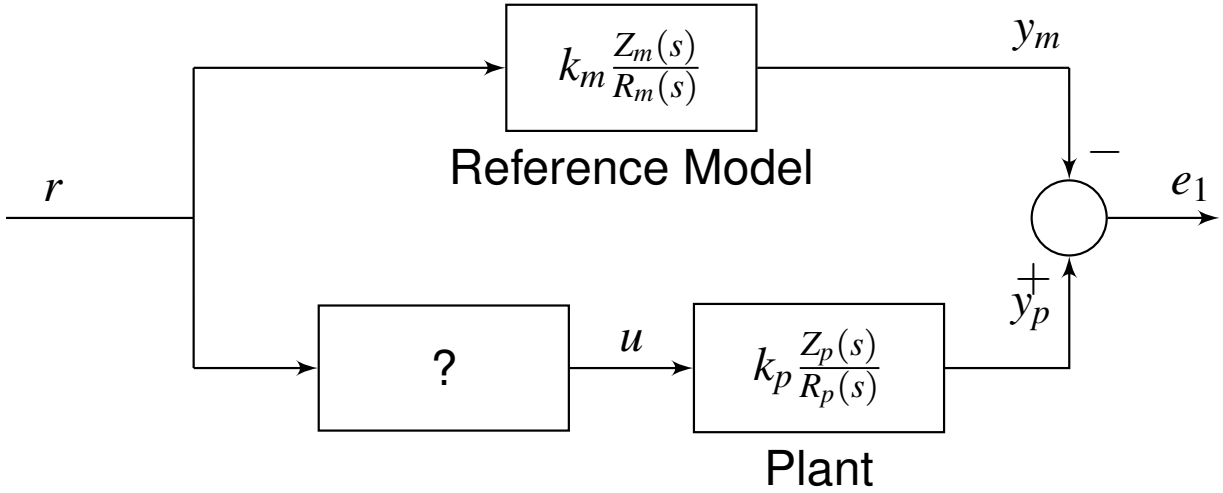

Goal: Choose u so that $e_1(t)$ tends to zero asymptotically. k_p and coefficients of $R_p(s)$ and $Z_p(s)$ are unknown. $R_p(s)$ is monic and of degree n.

Adaptive Control using Output Feedback

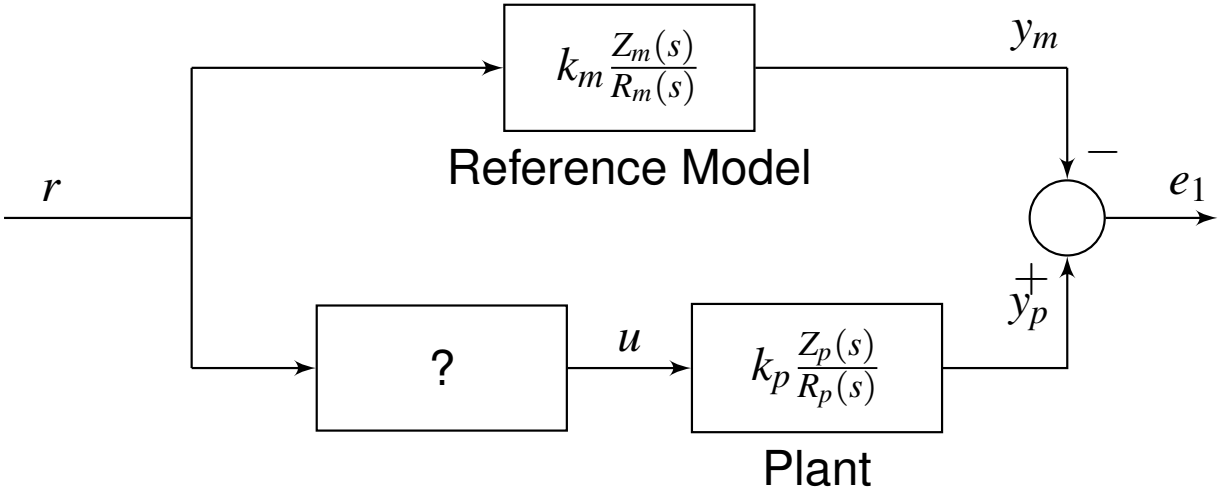

Goal: Choose u so that $e_1(t)$ tends to zero asymptotically. k_p and coefficients of $R_p(s)$ and $Z_p(s)$ are unknown. $R_p(s)$ is monic and of degree n. $Z_p(s)$ is monic and of degree $m \leq n-2$.

Adaptive Control using Output Feedback

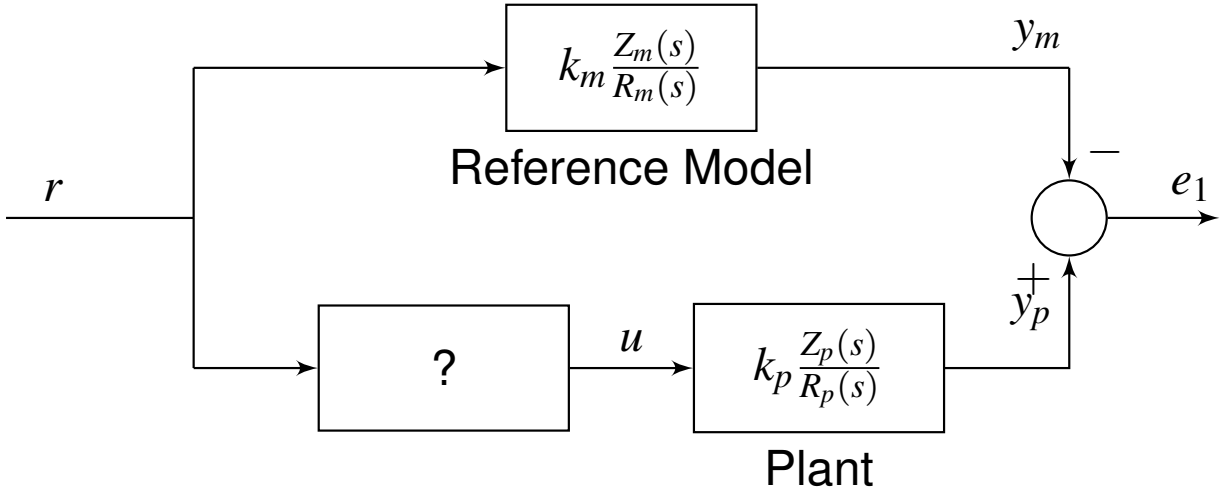

Goal: Choose u so that $e_1(t)$ tends to zero asymptotically. k_p and coefficients of $R_p(s)$ and $Z_p(s)$ are unknown. $R_p(s)$ is monic and of degree n. $Z_p(s)$ is monic and of degree $m \leq n-2$.

$R_m(s)$ is monic, Hurwitz, and of degree n.

Adaptive Control using Output Feedback

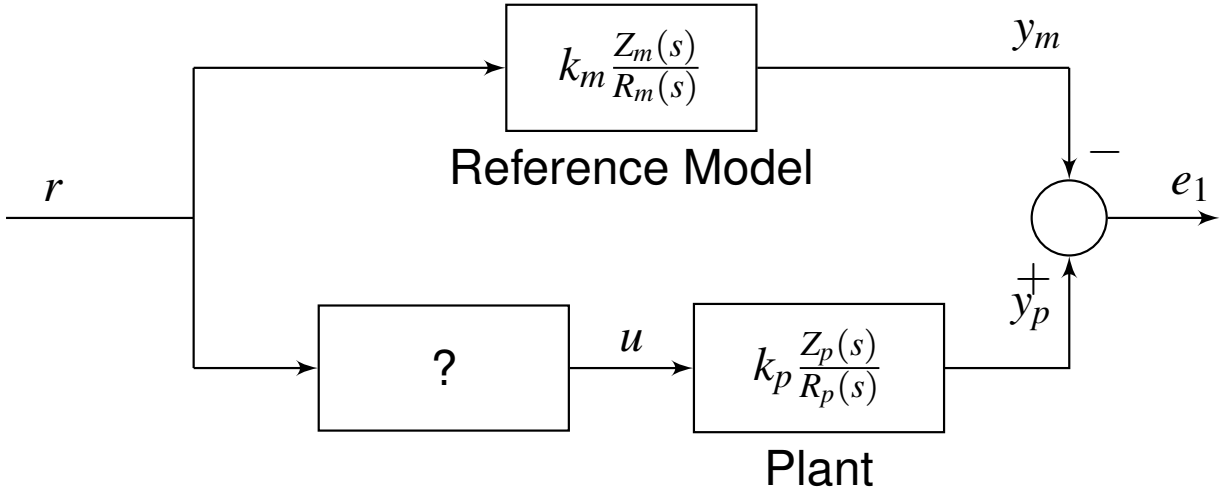

Goal: Choose u so that $e_1(t)$ tends to zero asymptotically. k_p and coefficients of $R_p(s)$ and $Z_p(s)$ are unknown. $R_p(s)$ is monic and of degree n. $Z_p(s)$ is monic and of degree $m \leq n-2$.

$R_m(s)$ is monic, Hurwitz, and of degree n. $Z_m(s)$ is monic and of degree $m \leq n-2$.

Adaptive Control using Output Feedback

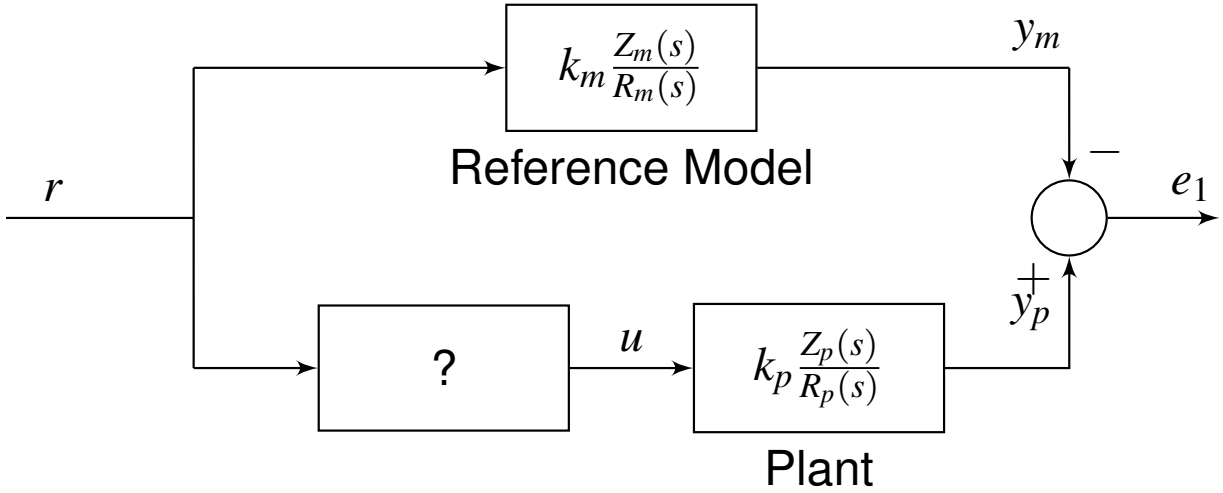

Goal: Choose u so that $e_1(t)$ tends to zero asymptotically. k_p and coefficients of $R_p(s)$ and $Z_p(s)$ are unknown. $R_p(s)$ is monic and of degree n. $Z_p(s)$ is monic and of degree $m \leq n-2$.

$R_m(s)$ is monic, Hurwitz, and of degree n. $Z_m(s)$ is monic and of degree $m \leq n-2$.

Assumptions:

- sign k_p known
- $Z_p(s)$ has roots in C^-.

Algebraic Part

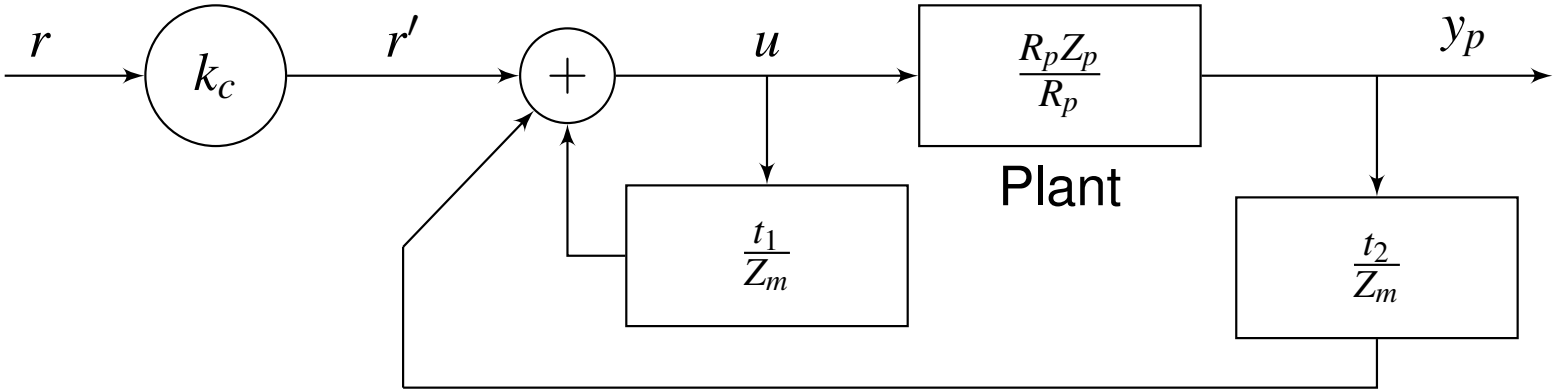

Algebraic Part

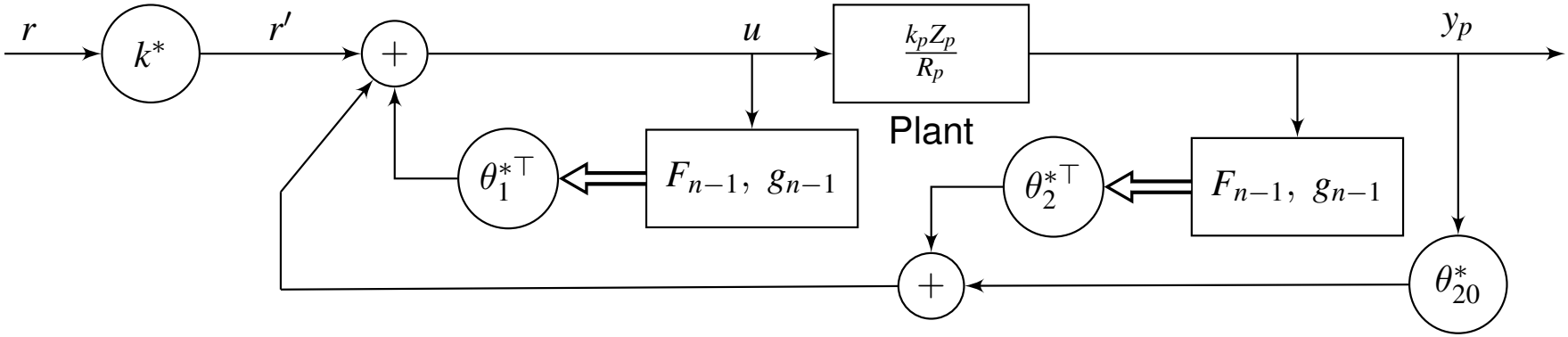

$$\frac{t_1^*}{Z_m} = \theta_1^{*T}(sI - F_{n-1})^{-1} g_{n-1}$$

Algebraic Part

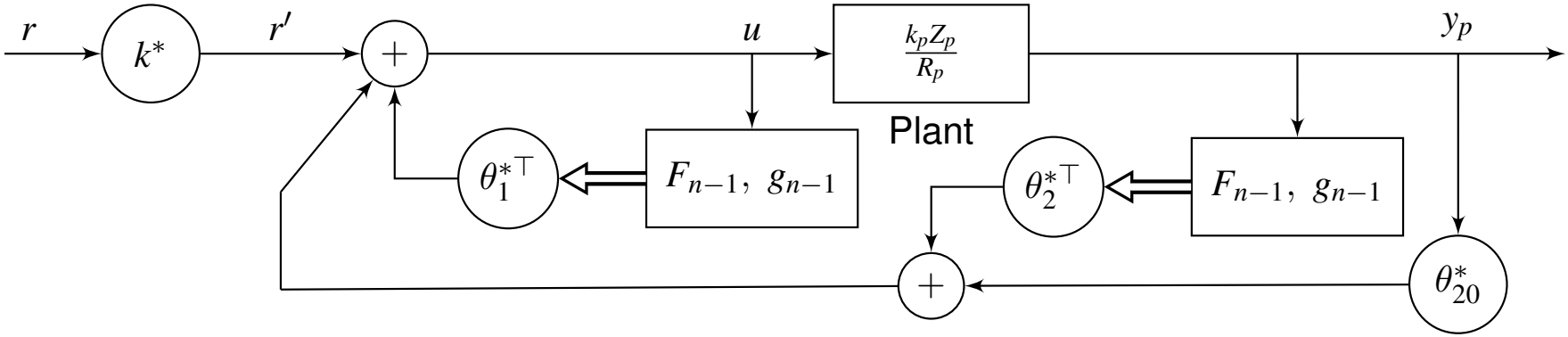

$$\frac{t_1^*}{Z_m} = \theta_1^{*T}(sI - F_{n-1})^{-1} g_{n-1} \qquad \frac{t_2^*}{Z_m} = \theta_{20}^* + \theta_2^{*T}(sI - F_{n-1})^{-1} g_{n-1}$$

Algebraic Part

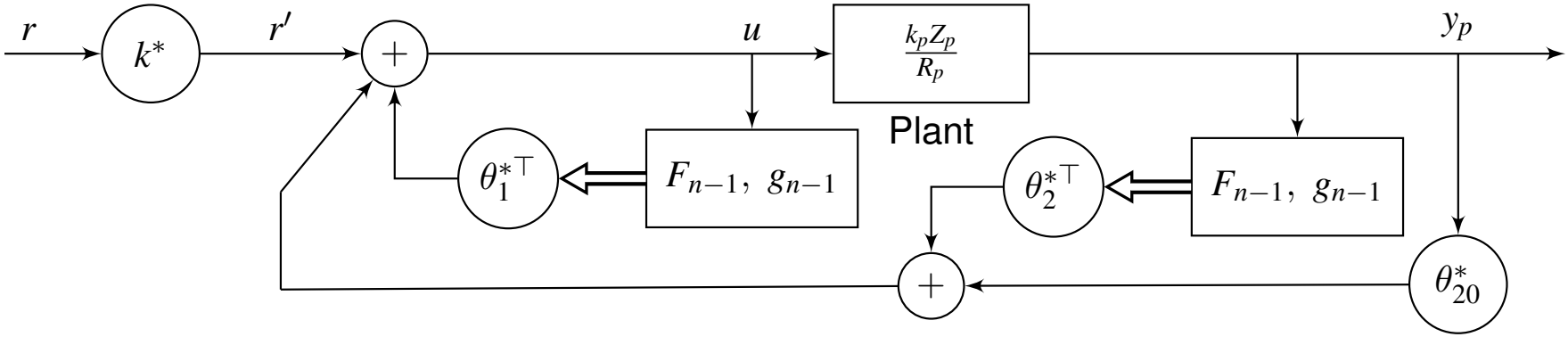

$$\frac{t_1^*}{Z_m} = \theta_1^{*T}(sI - F_{n-1})^{-1} g_{n-1} \qquad \frac{t_2^*}{Z_m} = \theta_{20}^* + \theta_2^{*T}(sI - F_{n-1})^{-1} g_{n-1}$$

$$\begin{aligned} Z_m(s) - t_1^*(s) &= Z_p(s), k^* = \frac{k_m}{k_p} \\ R_p(s) - k_p t_2^*(s) &= R_m(s) \end{aligned}$$

Algebraic Part

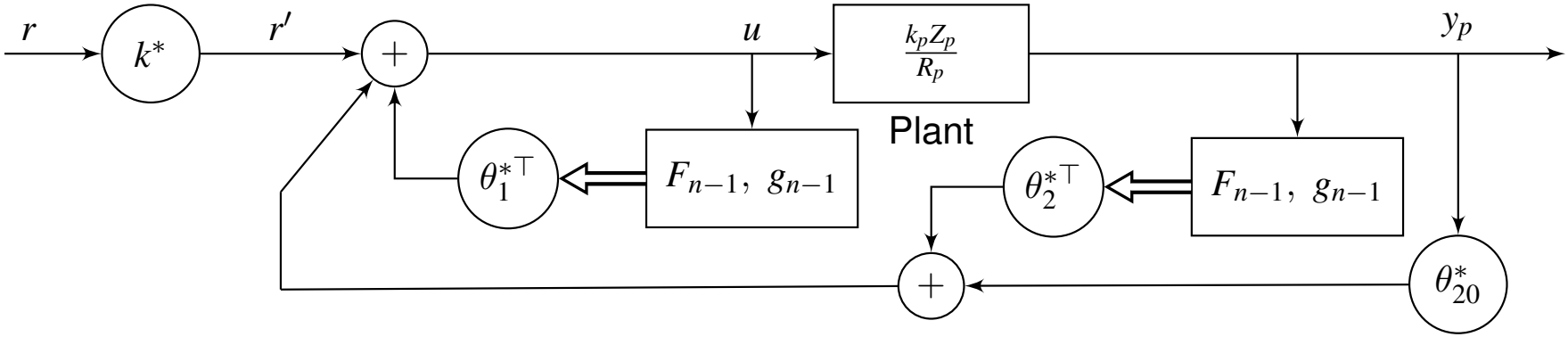

$$\frac{t_1^*}{Z_m} = \theta_1^{*T}(sI - F_{n-1})^{-1} g_{n-1} \qquad \frac{t_2^*}{Z_m} = \theta_{20}^* + \theta_2^{*T}(sI - F_{n-1})^{-1} g_{n-1}$$

$$\begin{aligned} Z_m(s) - t_1^*(s) &= Z_p(s), k^* = \frac{k_m}{k_p} \\ R_p(s) - k_p t_2^*(s) &= R_m(s) \times \end{aligned}$$

Not enough degrees of freedom in $t_2^*(s)$! Need Bezout Identity.

Algebraic Part

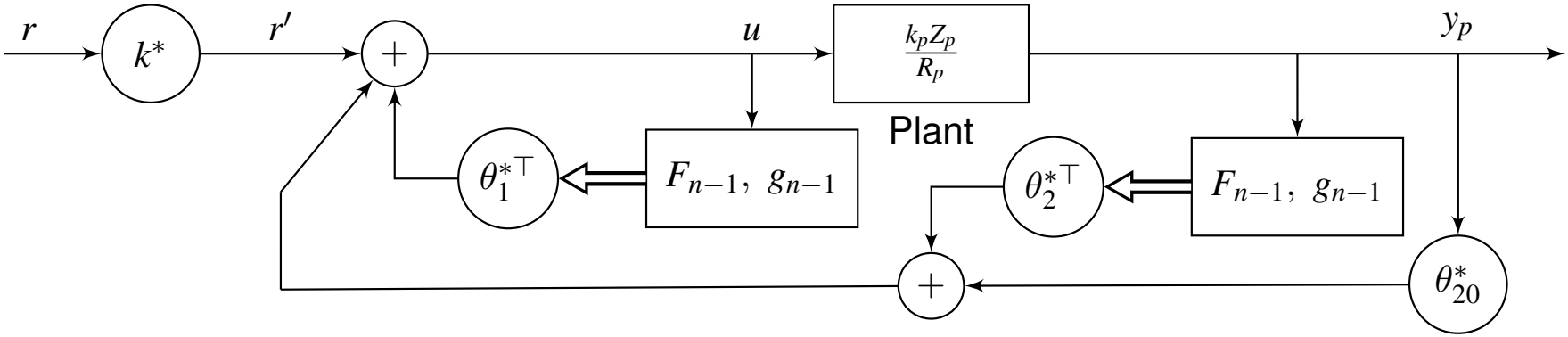

$$\frac{t_1^*}{Z_m} = \theta_1^{*T}(sI - F_{n-1})^{-1} g_{n-1} \qquad \frac{t_2^*}{Z_m} = \theta_{20}^* + \theta_2^{*T}(sI - F_{n-1})^{-1} g_{n-1}$$

$$\begin{aligned} Z_m(s) - t_1^*(s) &= Z_p(s), k^* = \frac{k_m}{k_p} \\ R_p(s) - k_p t_2^*(s) &= R_m(s) \times \end{aligned}$$

Not enough degrees of freedom in $t_2^*(s)$! Need Bezout Identity.
Replace $Z_m(s)$ by $Z_m'(s) = \lambda(s) Z_m(s)$

Algebraic Part

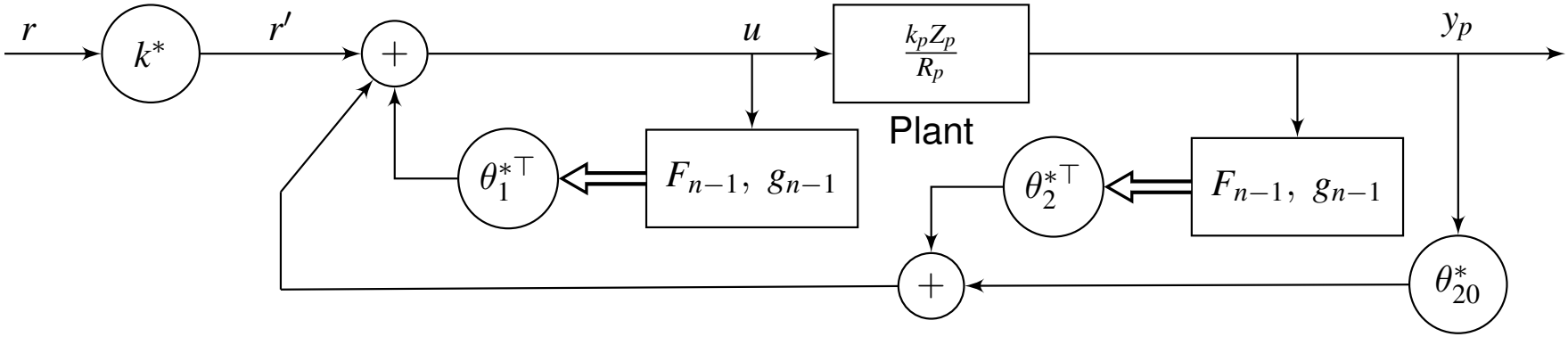

$$\frac{t_1^*}{Z_m} = \theta_1^{*T}(sI - F_{n-1})^{-1} g_{n-1} \qquad \frac{t_2^*}{Z_m} = \theta_{20}^* + \theta_2^{*T}(sI - F_{n-1})^{-1} g_{n-1}$$

$$\begin{aligned} Z_m(s) - t_1^*(s) &= Z_p(s), k^* = \frac{k_m}{k_p} \\ R_p(s) - k_p t_2^*(s) &= R_m(s) \times \end{aligned}$$

Not enough degrees of freedom in $t_2^*(s)$! Need Bezout Identity.
Replace $Z_m(s)$ by $Z_m'(s) = \lambda(s) Z_m(s)$ $deg(\lambda) = n - 1 - m$
New design:

$$\frac{t_1^*}{Z_m'} = \theta_1^{*T}(sI - F_{n-1})^{-1} g_{n-1}$$

Algebraic Part

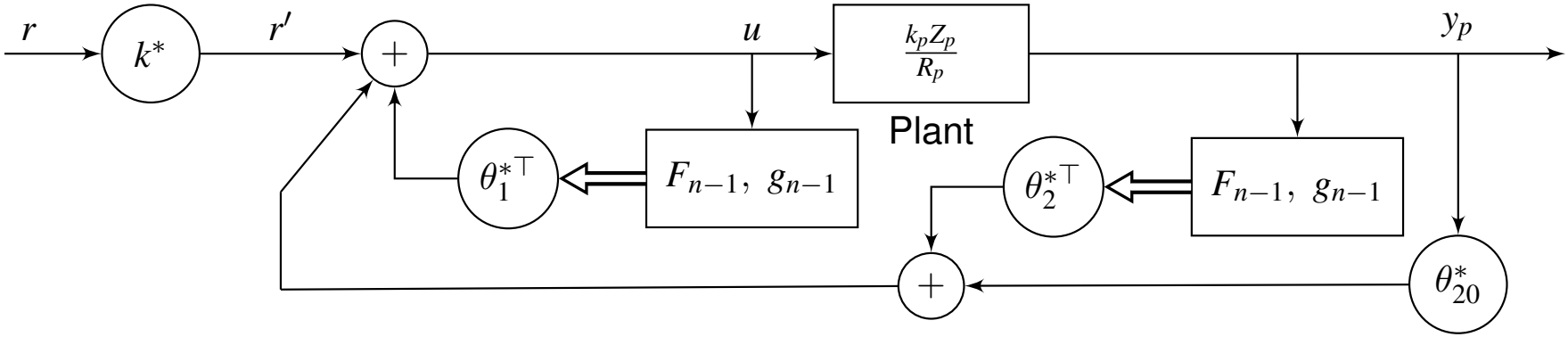

$$\frac{t_1^*}{Z_m} = \theta_1^{*T}(sI - F_{n-1})^{-1} g_{n-1} \qquad \frac{t_2^*}{Z_m} = \theta_{20}^* + \theta_2^{*T}(sI - F_{n-1})^{-1} g_{n-1}$$

$$\begin{aligned} Z_m(s) - t_1^*(s) &= Z_p(s), k^* = \frac{k_m}{k_p} \\ R_p(s) - k_p t_2^*(s) &= R_m(s) \times \end{aligned}$$

Not enough degrees of freedom in $t_2^*(s)$! Need Bezout Identity.
Replace $Z_m(s)$ by $Z_m'(s) = \lambda(s) Z_m(s)$ $deg(\lambda) = n - 1 - m$
New design:

$$\frac{t_1^*}{Z_m'} = \theta_1^{*T}(sI - F_{n-1})^{-1} g_{n-1} \qquad \frac{t_2^*}{Z_m'} = \theta_{20}^* + \theta_2^{*T}(sI - F_{n-1})^{-1} g_{n-1}$$

Algebraic part (contd.)

$$\text{TF from } r \text{ to } y_p \quad = \quad k_c \cdot \frac{\dfrac{1}{1 - \dfrac{t_1}{Z'_m}} \cdot \dfrac{k_p Z_p}{R_p}}{1 - \dfrac{1}{1 - \dfrac{t_1}{Z'_m}} \cdot \dfrac{k_p Z_p}{R_p} \dfrac{t_2}{Z'_m}}$$

Algebraic part (contd.)

$$\text{TF from } r \text{ to } y_p = k_c \cdot \frac{\dfrac{1}{1-\dfrac{t_1}{Z'_m}} \cdot \dfrac{k_p Z_p}{R_p}}{1 - \dfrac{1}{1-\dfrac{t_1}{Z'_m}} \cdot \dfrac{k_p Z_p}{R_p} \dfrac{t_2}{Z'_m}}$$

$$= k_c \cdot \frac{\dfrac{Z'_m}{Z'_m - t_1} \cdot \dfrac{k_p Z_p}{R_p}}{1 - \dfrac{Z'_m}{Z'_m - t_1} \cdot \dfrac{k_p Z_p}{R_p} \dfrac{t_2}{Z'_m}}$$

Algebraic part (contd.)

$$
\begin{aligned}
\text{TF from } r \text{ to } y_p &= k_c \cdot \frac{\dfrac{1}{1-\dfrac{t_1}{Z'_m}} \cdot \dfrac{k_p Z_p}{R_p}}{1 - \dfrac{1}{1-\dfrac{t_1}{Z'_m}} \cdot \dfrac{k_p Z_p}{R_p} \dfrac{t_2}{Z'_m}} \\
&= k_c \cdot \frac{\dfrac{Z'_m}{Z'_m - t_1} \cdot \dfrac{k_p Z_p}{R_p}}{1 - \dfrac{Z'_m}{Z'_m - t_1} \cdot \dfrac{k_p Z_p}{R_p} \dfrac{t_2}{Z'_m}} = \frac{k_c k_p Z'_m Z_p}{R_p(Z'_m - t_1) - (k_p Z_p) t_2(s)} \\
&= \frac{k_m Z_m \lambda(s) Z_p(s)}{R_m \lambda(s) Z_p(s)} \qquad \text{(from Bezout Identity)} \\
&= \frac{k_m Z_m}{R_m}
\end{aligned}
$$

Algebraic part (contd.)

$$
\begin{aligned}
\text{TF from } r \text{ to } y_p &= k_c \cdot \frac{\dfrac{1}{1-\dfrac{t_1}{Z'_m}} \cdot \dfrac{k_p Z_p}{R_p}}{1 - \dfrac{1}{1-\dfrac{t_1}{Z'_m}} \cdot \dfrac{k_p Z_p}{R_p} \dfrac{t_2}{Z'_m}} \\
&= k_c \cdot \frac{\dfrac{Z'_m}{Z'_m - t_1} \cdot \dfrac{k_p Z_p}{R_p}}{1 - \dfrac{Z'_m}{Z'_m - t_1} \cdot \dfrac{k_p Z_p}{R_p} \dfrac{t_2}{Z'_m}} = \frac{k_c k_p Z'_m Z_p}{R_p(Z'_m - t_1) - (k_p Z_p) t_2(s)} \\
&= \frac{k_m Z_m \lambda(s) Z_p(s)}{R_m \lambda(s) Z_p(s)} \qquad \text{(from Bezout Identity)} \\
&= \frac{k_m Z_m}{R_m} = W_m(s) \quad \text{- Reference Model}
\end{aligned}
$$

Bezout Identity

Need $R_p(s)(Z'_m(s) - t_1(s)) - (k_p Z_p(s))t_2(s) \quad = \quad R_m(s)\lambda(s)Z_p(s)$

Bezout Identity

Need $R_p(s)(Z'_m(s) - t_1(s)) - (k_p Z_p(s))t_2(s) \quad = \quad R_m(s)\lambda(s)Z_p(s)$

$n +$

Bezout Identity

Need $R_p(s)(Z'_m(s) - t_1(s)) - (k_p Z_p(s))t_2(s) \quad = \quad R_m(s)\lambda(s)Z_p(s)$

$$n + n - 1$$

Bezout Identity

Need $R_p(s)(Z'_m(s) - t_1(s)) - (k_p Z_p(s))t_2(s) \quad = \quad R_m(s)\lambda(s)Z_p(s)$

$$n + n - 1 \qquad\qquad n +$$

Bezout Identity

Need $R_p(s)(Z'_m(s) - t_1(s)) - (k_p Z_p(s))t_2(s) \quad = \quad R_m(s)\lambda(s)Z_p(s)$

$$n + n - 1 \qquad\qquad n + deg(\lambda) + m$$

Bezout Identity

$$\text{Need } R_p(s)(Z'_m(s) - t_1(s)) - (k_p Z_p(s))t_2(s) = R_m(s)\lambda(s)Z_p(s)$$

$$n + n - 1 \qquad n + deg(\lambda) + m = 2n - 1$$

Bezout Identity:

$P(s)$: Polynomial of degree $m \leq n - 1$

Bezout Identity

$$\text{Need } R_p(s)(Z'_m(s) - t_1(s)) - (k_p Z_p(s))t_2(s) = R_m(s)\lambda(s)Z_p(s)$$

$$n + n - 1 \qquad n + deg(\lambda) + m = 2n - 1$$

Bezout Identity:
$P(s)$: Polynomial of degree $m \leq n - 1$
$Q(s)$: Polynomial of degree n

Bezout Identity

$$\text{Need } R_p(s)(Z'_m(s) - t_1(s)) - (k_p Z_p(s))t_2(s) = R_m(s)\lambda(s)Z_p(s)$$

$$n + n - 1 \qquad n + deg(\lambda) + m = 2n - 1$$

Bezout Identity:
$P(s)$: Polynomial of degree $m \leq n - 1$
$Q(s)$: Polynomial of degree n
$M(s)$: Monic polynomial of degree $n - 1$

Bezout Identity

$$\text{Need } R_p(s)(Z'_m(s) - t_1(s)) - (k_p Z_p(s))t_2(s) = R_m(s)\lambda(s)Z_p(s)$$

$$n + n - 1 \qquad n + deg(\lambda) + m = 2n - 1$$

Bezout Identity:
$P(s)$: Polynomial of degree $m \leq n - 1$
$Q(s)$: Polynomial of degree n
$M(s)$: Monic polynomial of degree $n - 1$
$N(s)$: Polynomial of degree $n - 1$

Bezout Identity

$$\text{Need } R_p(s)(Z'_m(s) - t_1(s)) - (k_p Z_p(s))t_2(s) = R_m(s)\lambda(s)Z_p(s)$$

$$n + n - 1 \qquad n + deg(\lambda) + m = 2n - 1$$

Bezout Identity:
$P(s)$: Polynomial of degree $m \leq n - 1$
$Q(s)$: Polynomial of degree n
$M(s)$: Monic polynomial of degree $n - 1$
$N(s)$: Polynomial of degree $n - 1$
$Q^*(s)$: Monic polynomial of degree $2n - 1$

Bezout Identity

$$\text{Need } R_p(s)(Z'_m(s) - t_1(s)) - (k_p Z_p(s))t_2(s) = R_m(s)\lambda(s)Z_p(s)$$

$$n + n - 1 \qquad n + deg(\lambda) + m = 2n - 1$$

Bezout Identity:
$P(s)$: Polynomial of degree $m \leq n - 1$
$Q(s)$: Polynomial of degree n
$M(s)$: Monic polynomial of degree $n - 1$
$N(s)$: Polynomial of degree $n - 1$
$Q^*(s)$: Monic polynomial of degree $2n - 1$

Given $P(s)$ and $Q(s)$ that are coprime, and $Q^*(s)$, there exist $M(s)$ and $N(s)$ such that

$$Q(s)M(s) + P(s)N(s) = Q^*(s)$$

Bezout Identity

$$\text{Need } R_p(s)(Z'_m(s) - t_1(s)) - (k_p Z_p(s))t_2(s) \quad = \quad R_m(s)\lambda(s)Z_p(s)$$
$$n + n - 1 \qquad\qquad n + deg(\lambda) + m = 2n - 1$$

Bezout Identity:
$P(s)$: Polynomial of degree $m \leq n - 1$
$Q(s)$: Polynomial of degree n
$M(s)$: Monic polynomial of degree $n - 1$
$N(s)$: Polynomial of degree $n - 1$
$Q^*(s)$: Monic polynomial of degree $2n - 1$

Given $P(s)$ and $Q(s)$ that are coprime, and $Q^*(s)$, there exist $M(s)$ and $N(s)$ such that

$$Q(s)M(s) + P(s)N(s) \quad = \quad Q^*(s) \implies t_1(s), t_2(s) \text{ exist}$$

Analytic Part

$$
\begin{aligned}
R_p(s)(Z'_m(s) - t_1^*(s)) - (k_p Z_p(s))t_2^*(s) &= R_m(s)\lambda(s)Z_p(s) \\
Z'_m(s) &= det(sI - F_{n-1})
\end{aligned}
$$

Analytic Part

$$
\begin{aligned}
R_p(s)(Z'_m(s) - t_1^*(s)) - (k_p Z_p(s))t_2^*(s) &= R_m(s)\lambda(s)Z_p(s) \\
Z'_m(s) &= det(sI - F_{n-1})
\end{aligned}
$$

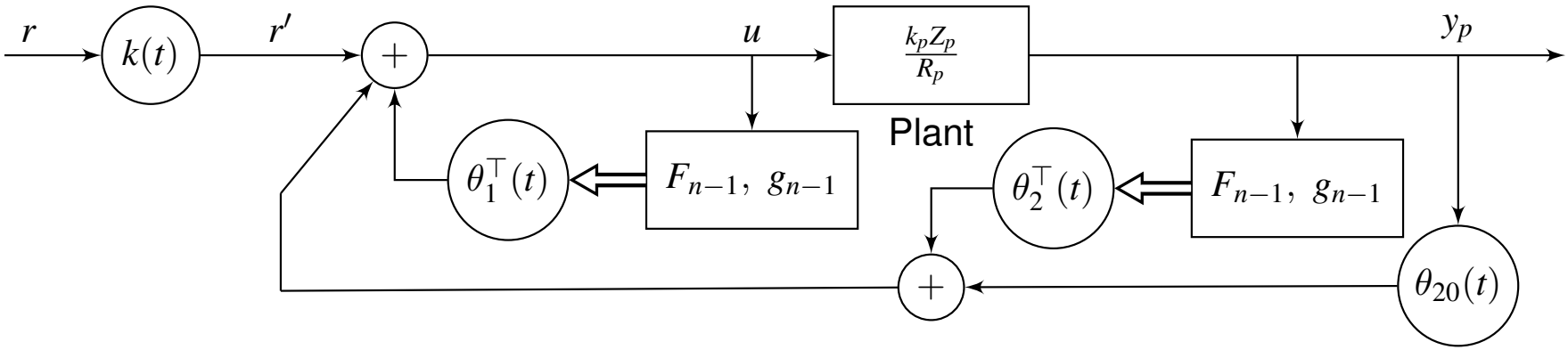

Analytic Part

$$
\begin{aligned}
R_p(s)(Z'_m(s) - t_1^*(s)) - (k_p Z_p(s))t_2^*(s) &= R_m(s)\lambda(s)Z_p(s) \\
Z'_m(s) &= det(sI - F_{n-1})
\end{aligned}
$$

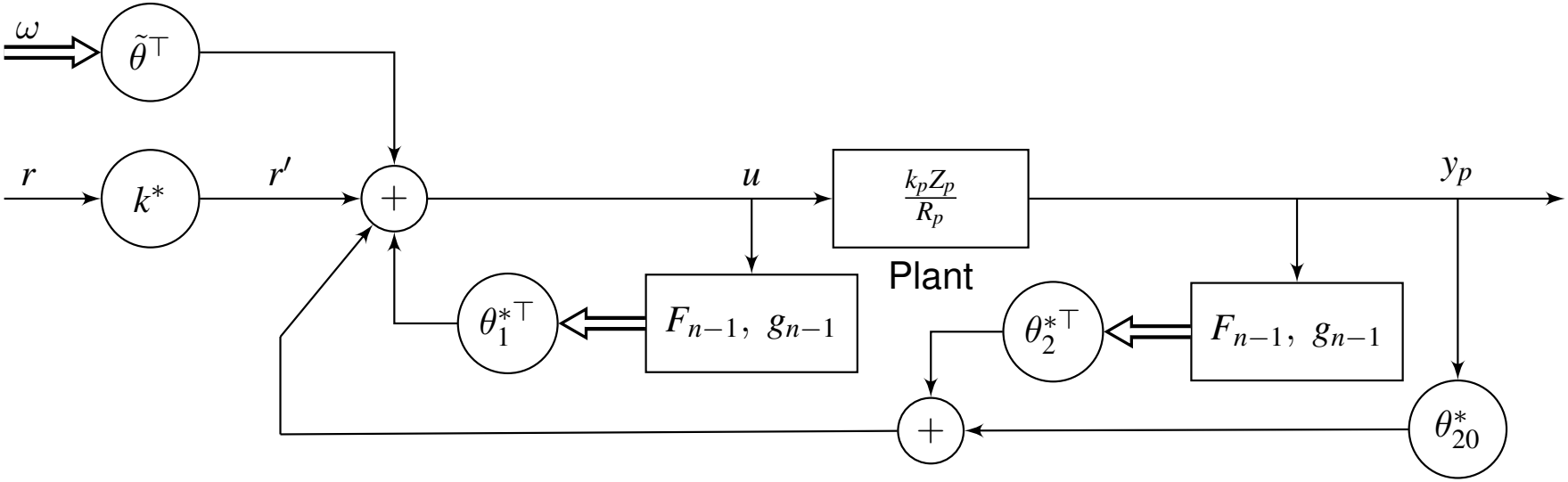

$$
u(t) = \theta^T(t)\omega(t)
$$

Analytic Part

$$
\begin{aligned}
R_p(s)(Z'_m(s) - t_1^*(s)) - (k_p Z_p(s))t_2^*(s) &= R_m(s)\lambda(s)Z_p(s) \\
Z'_m(s) &= det(sI - F_{n-1})
\end{aligned}
$$

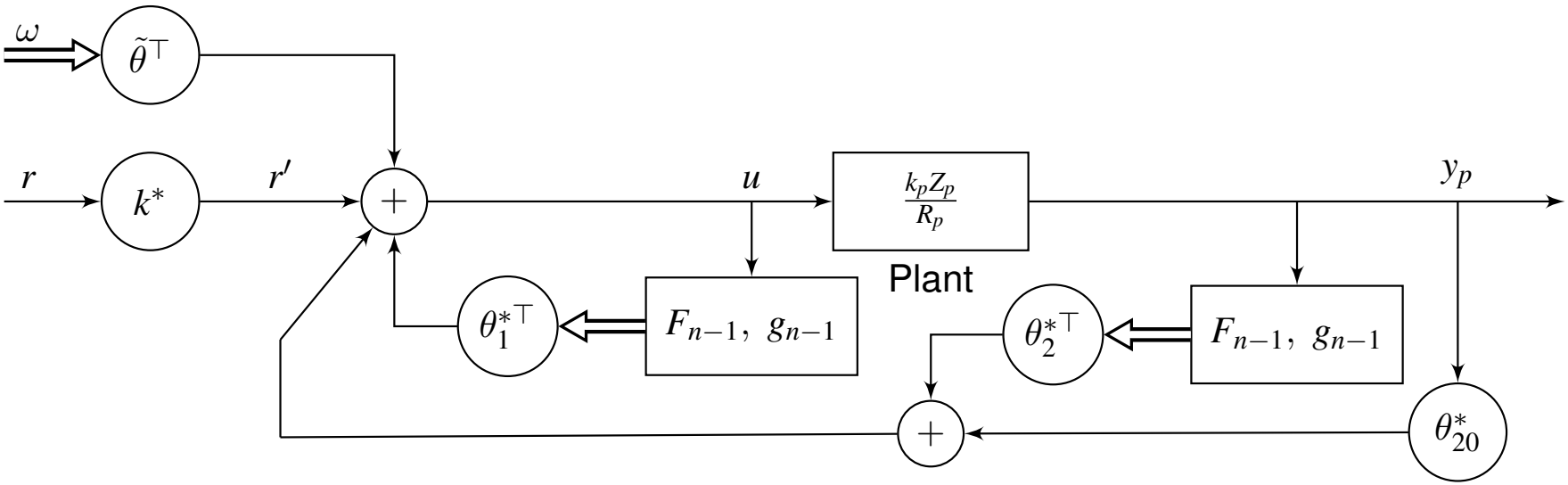

$$
\begin{aligned}
u(t) &= \theta^T(t)\omega(t) \\
&= \theta^{*T}\omega(t) + \widetilde{\theta}^T(t)\omega(t)
\end{aligned}
$$

Analytic Part

$$
\begin{aligned}
R_p(s)(Z'_m(s) - t_1^*(s)) - (k_p Z_p(s))t_2^*(s) &= R_m(s)\lambda(s)Z_p(s) \\
Z'_m(s) &= det(sI - F_{n-1})
\end{aligned}
$$

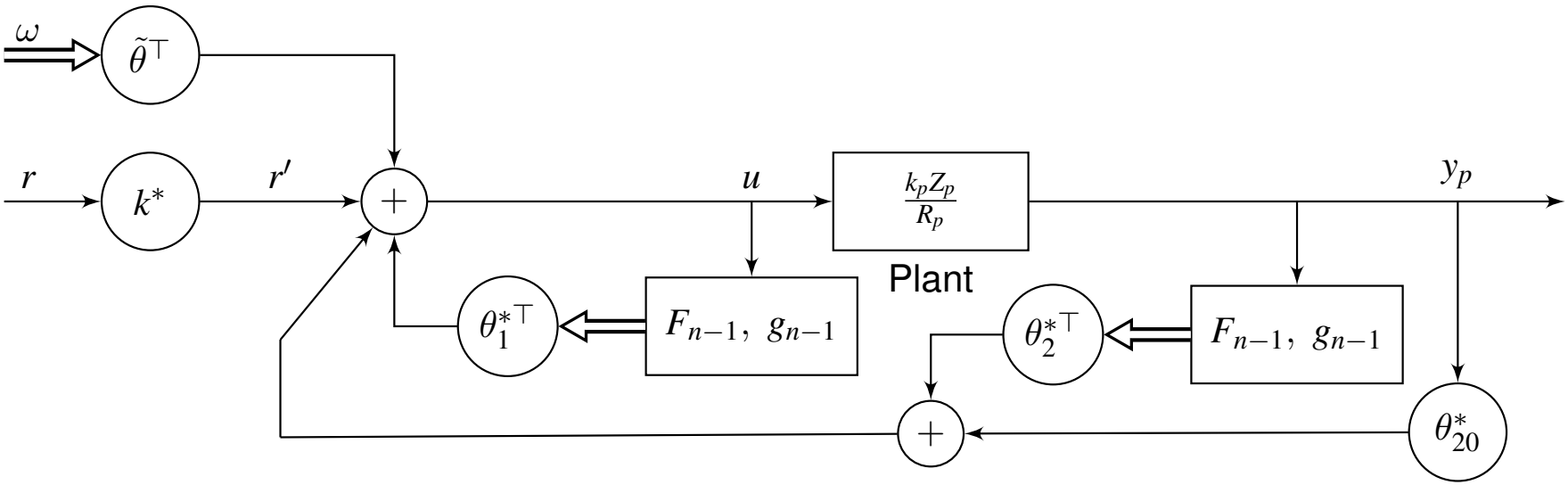

$$
\begin{aligned}
u(t) &= \theta^T(t)\omega(t) \\
&= \theta^{*T}\omega(t) + \widetilde{\theta}^T(t)\omega(t) \\
\theta^* &= [k^*,\ \theta_1^{*T},\ \theta_{20}^{*T},\ \theta_2^{*T}]^T,\ \omega = [r,\ \omega_1^T,\ y_p,\ \omega_2^T]^T
\end{aligned}
$$

Analytic Part

$$
\begin{aligned}
R_p(s)(Z'_m(s) - t_1^*(s)) - (k_p Z_p(s))t_2^*(s) &= R_m(s)\lambda(s)Z_p(s) \\
Z'_m(s) &= det(sI - F_{n-1})
\end{aligned}
$$

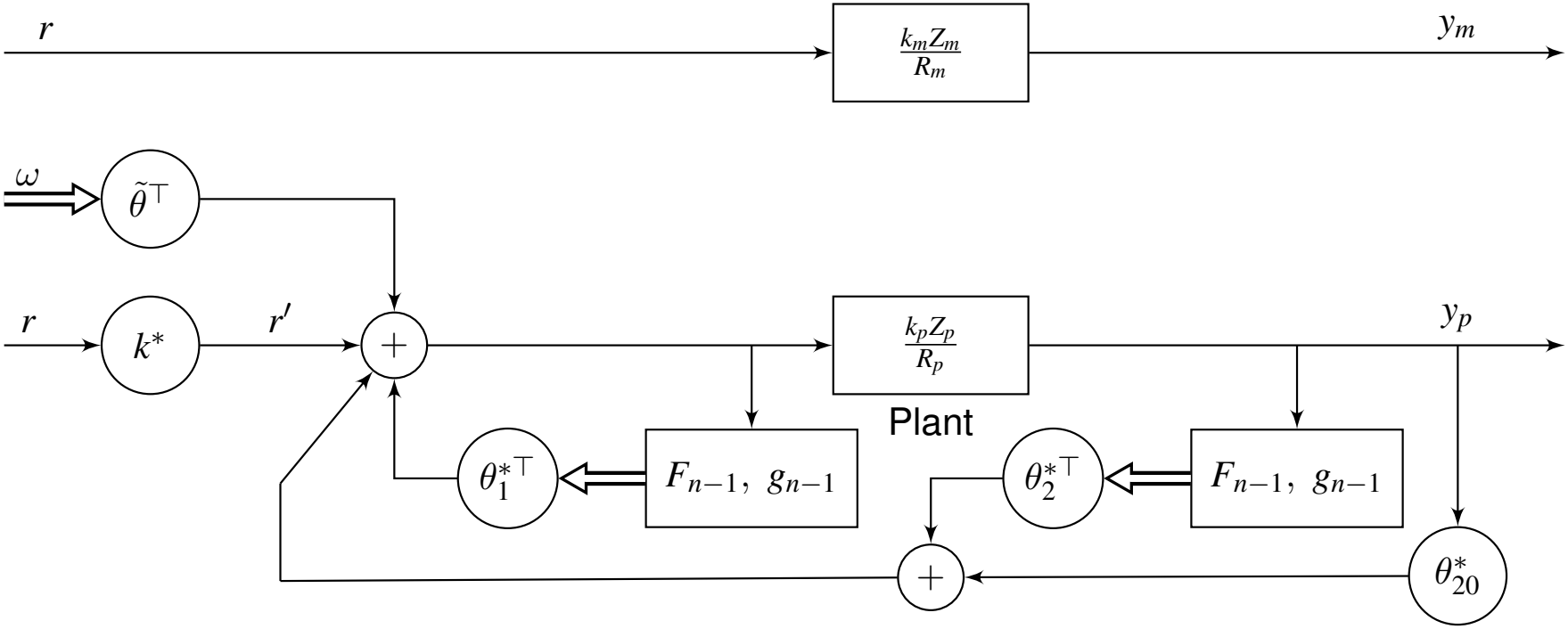

$$
\begin{aligned}
u(t) &= \theta^T(t)\omega(t) \\
&= \theta^{*T}\omega(t) + \widetilde{\theta}^T(t)\omega(t) \\
\theta^* &= [k^*,\ \theta_1^{*T},\ \theta_{20}^{*T},\ \theta_2^{*T}]^T,\ \omega = [r,\ \omega_1^T,\ y_p,\ \omega_2^T]^T
\end{aligned}
$$

Analytic Part

$$
\begin{aligned}
R_p(s)(Z'_m(s) - t_1^*(s)) - (k_p Z_p(s)) t_2^*(s) &= R_m(s)\lambda(s) Z_p(s) \\
Z'_m(s) &= det(sI - F_{n-1})
\end{aligned}
$$

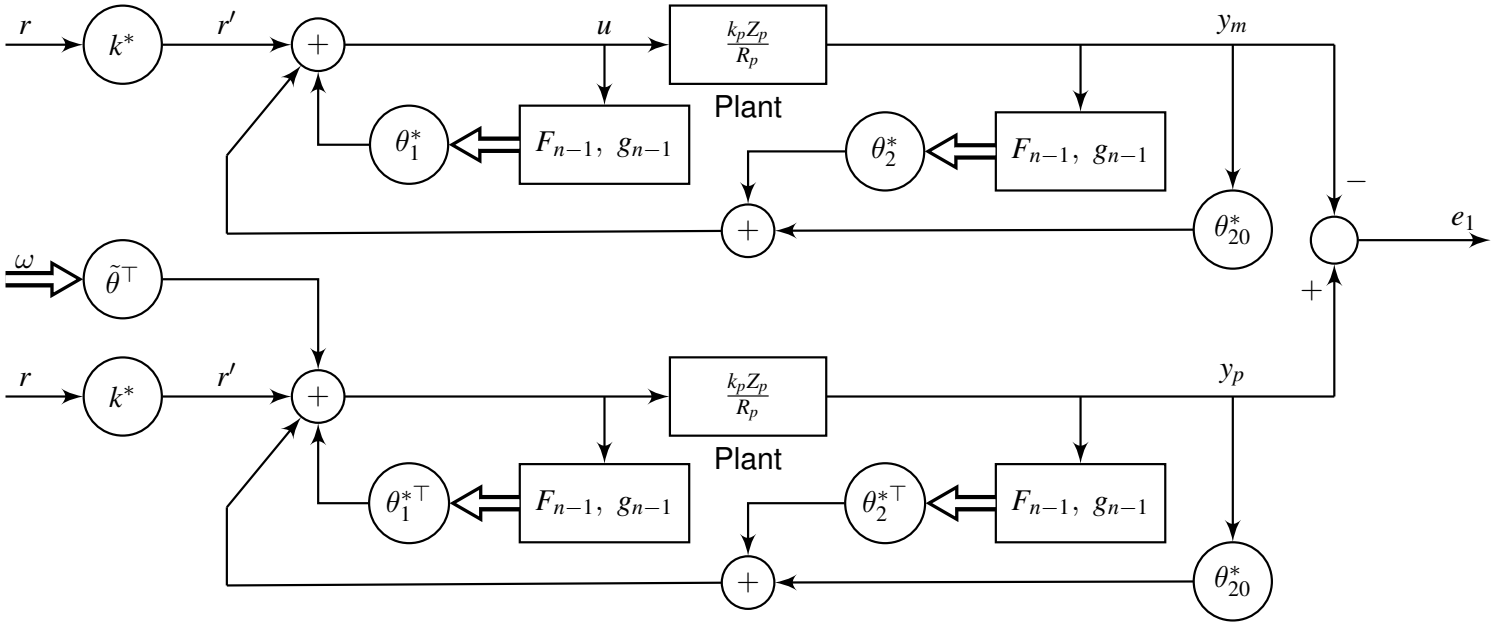

$$
\begin{aligned}
u(t) &= \theta^T(t)\omega(t) \\
&= \theta^{*T}\omega(t) + \widetilde{\theta}^T(t)\omega(t) \\
\theta^* &= [k^*,\ \theta_1^{*T},\ \theta_{20}^{*T},\ \theta_2^{*T}]^T,\ \omega = [r,\ \omega_1^T,\ y_p,\ \omega_2^T]^T
\end{aligned}
$$

Error Model

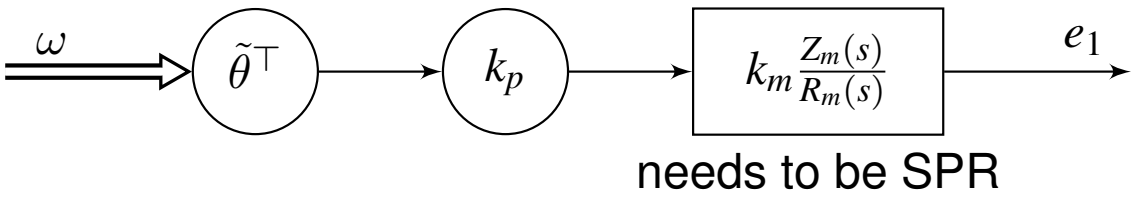

$$\begin{aligned}\dot{\tilde{k}} &= -sign(k_p)e_1 r \\ \dot{\tilde{\theta}}_1 &= -sign(k_p)e_1\omega_1\end{aligned}$$

$$\begin{aligned}\dot{\tilde{\theta}}_{20} &= -sign(k_p)e_1 y_p \\ \dot{\tilde{\theta}}_2 &= -sign(k_p)e_1\omega_2\end{aligned}$$

Problem: $W_m(s)$ not SPR!
Several methods have been proposed in the literature. We will discuss one method -

Error Model

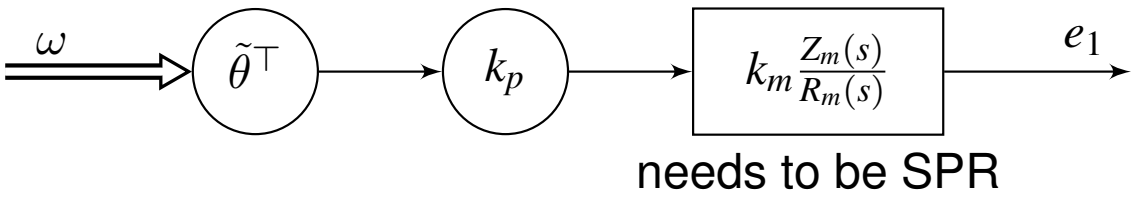

$$\begin{aligned}\dot{\tilde{k}} &= -sign(k_p)e_1 r \\ \dot{\tilde{\theta}}_1 &= -sign(k_p)e_1\omega_1\end{aligned}$$

$$\begin{aligned}\dot{\tilde{\theta}}_{20} &= -sign(k_p)e_1 y_p \\ \dot{\tilde{\theta}}_2 &= -sign(k_p)e_1\omega_2\end{aligned}$$

Problem: $W_m(s)$ not SPR!
Several methods have been proposed in the literature. We will discuss one method - Augmented Error

Augmented Error: Swapping Lemma

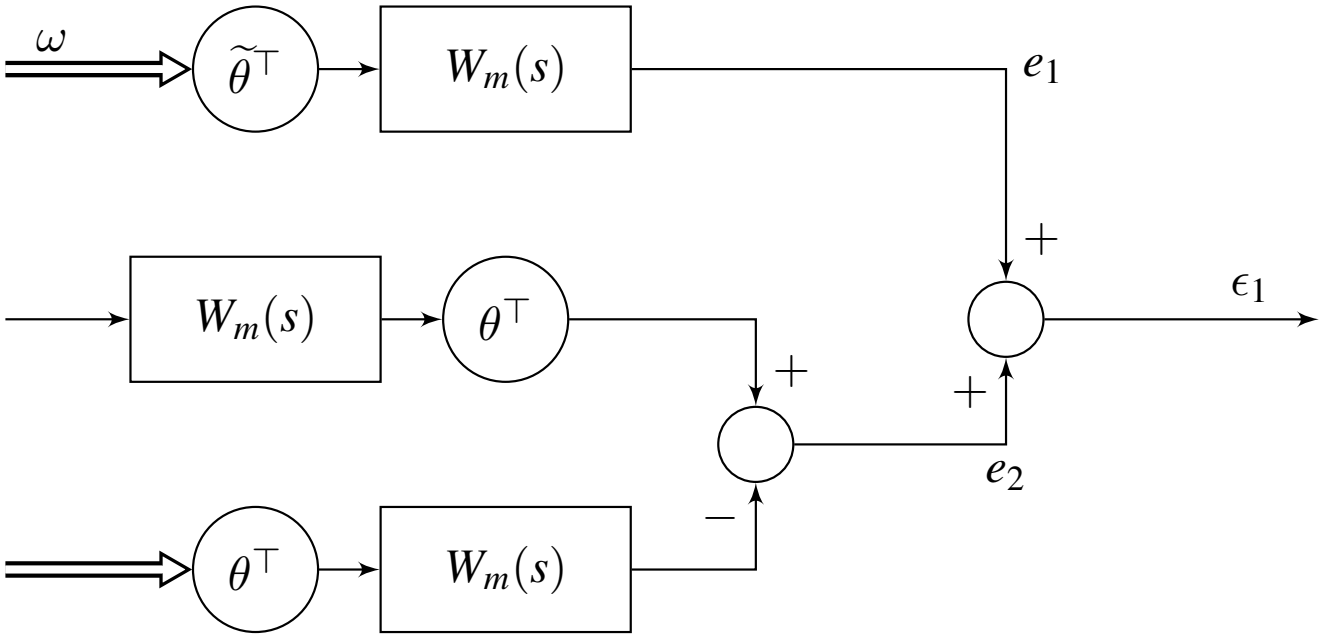

Assume k_p known.

Augmented Error: Swapping Lemma

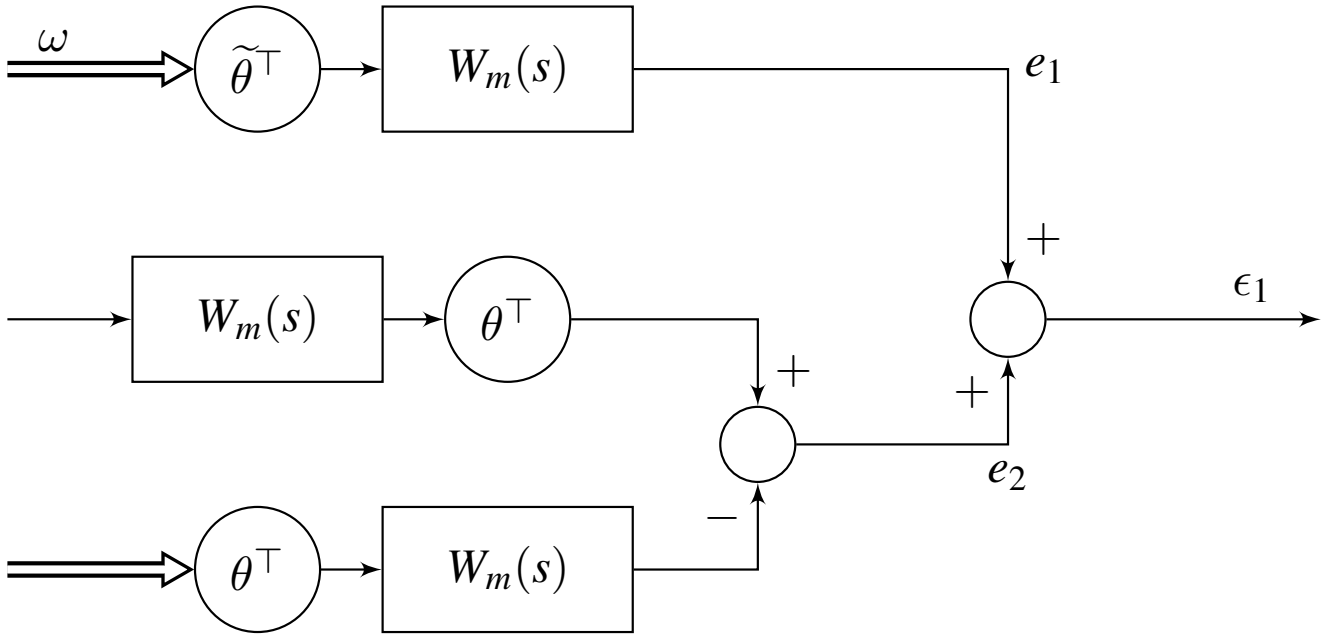

Assume k_p known. e_2: Auxiliary error

$$e_2 = -W_m(s)[\theta^T \omega(t)] + \theta^T W_m(s)[\omega(t)]$$

Augmented Error: Swapping Lemma

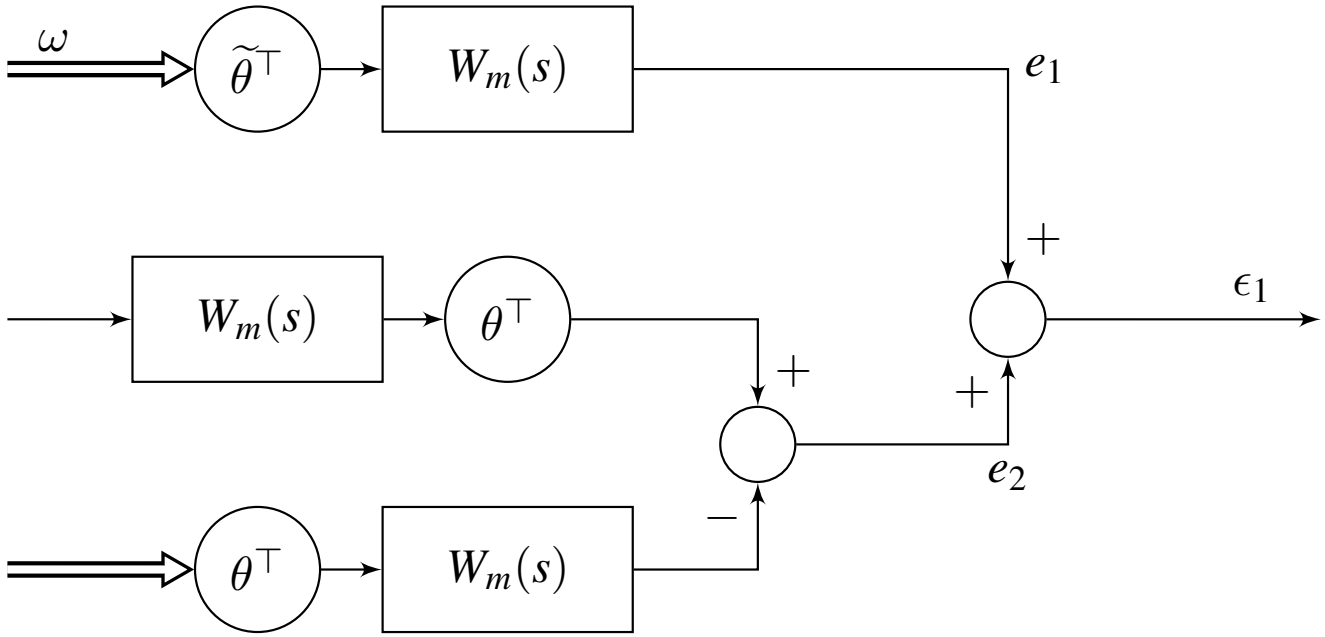

Assume k_p known. e_2: Auxiliary error

$$
\begin{aligned}
e_2 &= -W_m(s)[\theta^T\omega(t)] + \theta^T W_m(s)[\omega(t)] \\
\epsilon_1 &= e_1 + e_2 \\
&= \widetilde{\theta}^T W_m(s)\omega = \widetilde{\theta}^T \zeta
\end{aligned}
$$

- Error Model 1

Augmented Error: Swapping Lemma

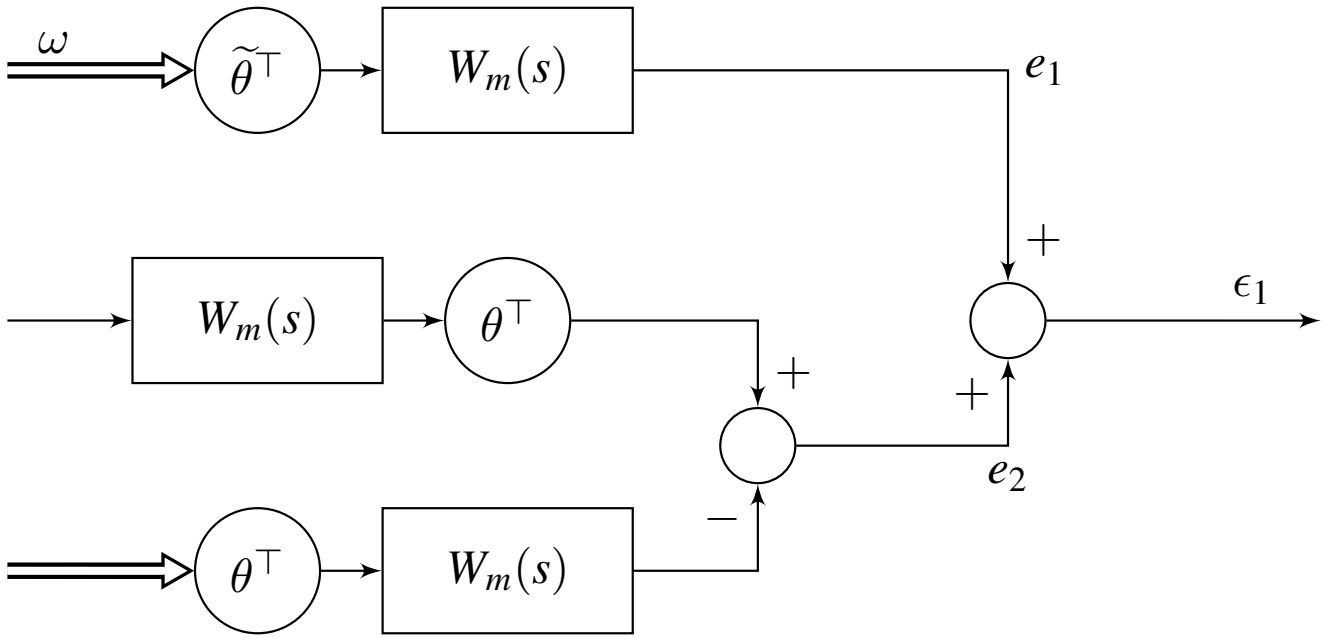

Assume k_p known. e_2: Auxiliary error

$$
\begin{aligned}
e_2 &= -W_m(s)[\theta^T\omega(t)] + \theta^T W_m(s)[\omega(t)] \\
&= \left(-W_m(s)[\theta^{*T}\omega] + \theta^{*T} W_m(s)[\omega]\right) - W_m(s)[\widetilde{\theta}^T\omega] + \widetilde{\theta}^T W_m(s)[\omega]
\end{aligned}
$$

$$
\begin{aligned}
\epsilon_1 &= e_1 + e_2 \\
&= \widetilde{\theta}^T W_m(s)\omega = \widetilde{\theta}^T \zeta
\end{aligned}
$$

Augmented Error: Swapping Lemma

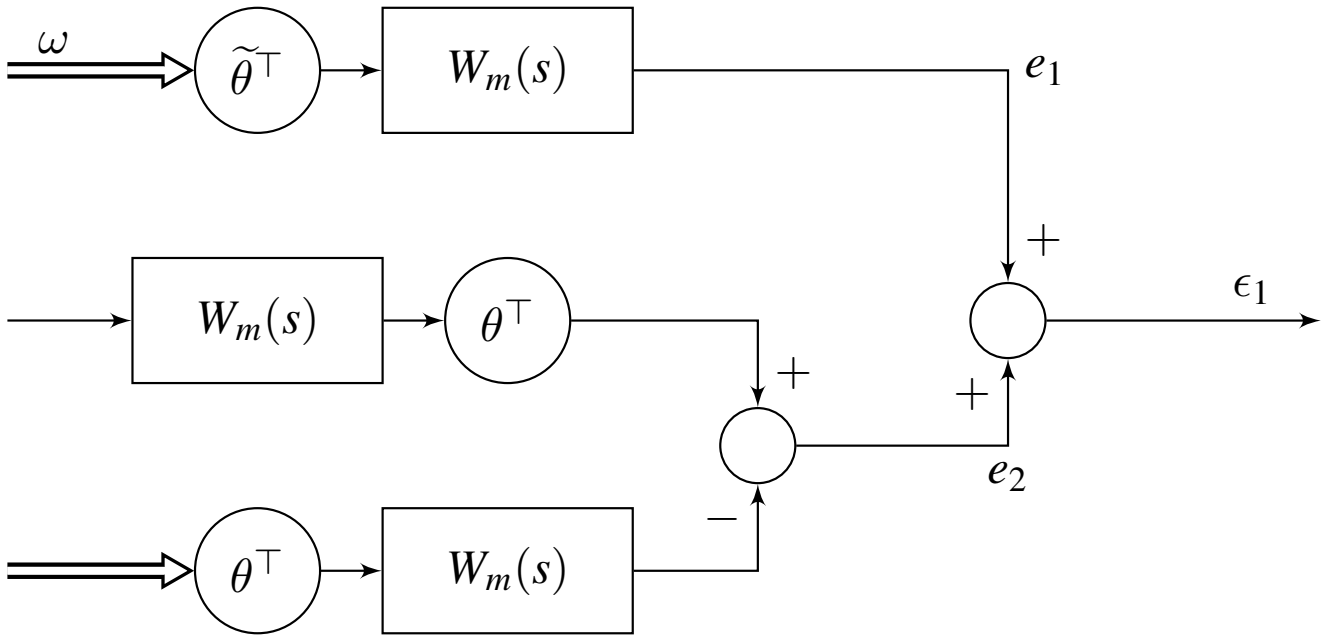

Assume k_p known. e_2: Auxiliary error

$$
\begin{aligned}
e_2 &= -W_m(s)[\theta^T\omega(t)] + \theta^T W_m(s)[\omega(t)] \\
&= \left(\cancel{-W_m(s)[\theta^{*T}\omega]} + \cancel{\theta^{*T}W_m(s)[\omega]}\right) - W_m(s)[\widetilde{\theta}^T\omega] + \widetilde{\theta}^T W_m(s)[\omega]
\end{aligned}
$$

$$
\begin{aligned}
\epsilon_1 &= e_1 + e_2 \\
&= \widetilde{\theta}^T W_m(s)\omega = \widetilde{\theta}^T\zeta
\end{aligned}
$$

Augmented Error

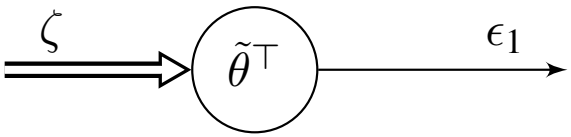

Not easy to show that ϵ_1 (and e_1) are bounded.

1. $\widetilde{\theta} \in \mathcal{L}_\infty$.

Augmented Error

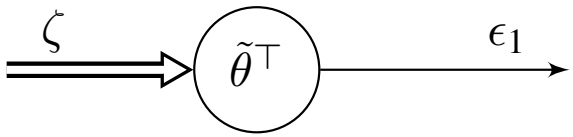

Not easy to show that ϵ_1 (and e_1) are bounded.

1. $\widetilde{\theta} \in \mathcal{L}_\infty$. Converts NLTV system to an LTV system

Augmented Error

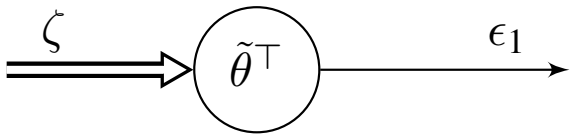

Not easy to show that ϵ_1 (and e_1) are bounded.

1. $\widetilde{\theta} \in \mathcal{L}_\infty$. Converts NLTV system to an LTV system
2. $\dot{\widetilde{\theta}} \in \mathcal{L}_2$.

Augmented Error

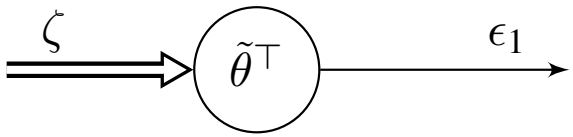

Not easy to show that ϵ_1 (and e_1) are bounded.

1. $\widetilde{\theta} \in \mathcal{L}_\infty$. Converts NLTV system to an LTV system
2. $\dot{\widetilde{\theta}} \in \mathcal{L}_2$. Converts LTV system to an almost time-invariant system
3. Proof by contradiction.

Augmented Error

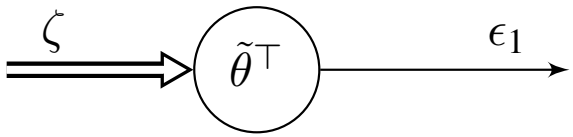

Not easy to show that ϵ_1 (and e_1) are bounded.

1. $\widetilde{\theta} \in \mathcal{L}_\infty$. Converts NLTV system to an LTV system
2. $\dot{\widetilde{\theta}} \in \mathcal{L}_2$. Converts LTV system to an almost time-invariant system
3. Proof by contradiction. $\implies \omega \in \mathcal{L}_\infty$.

Proof of boundedness

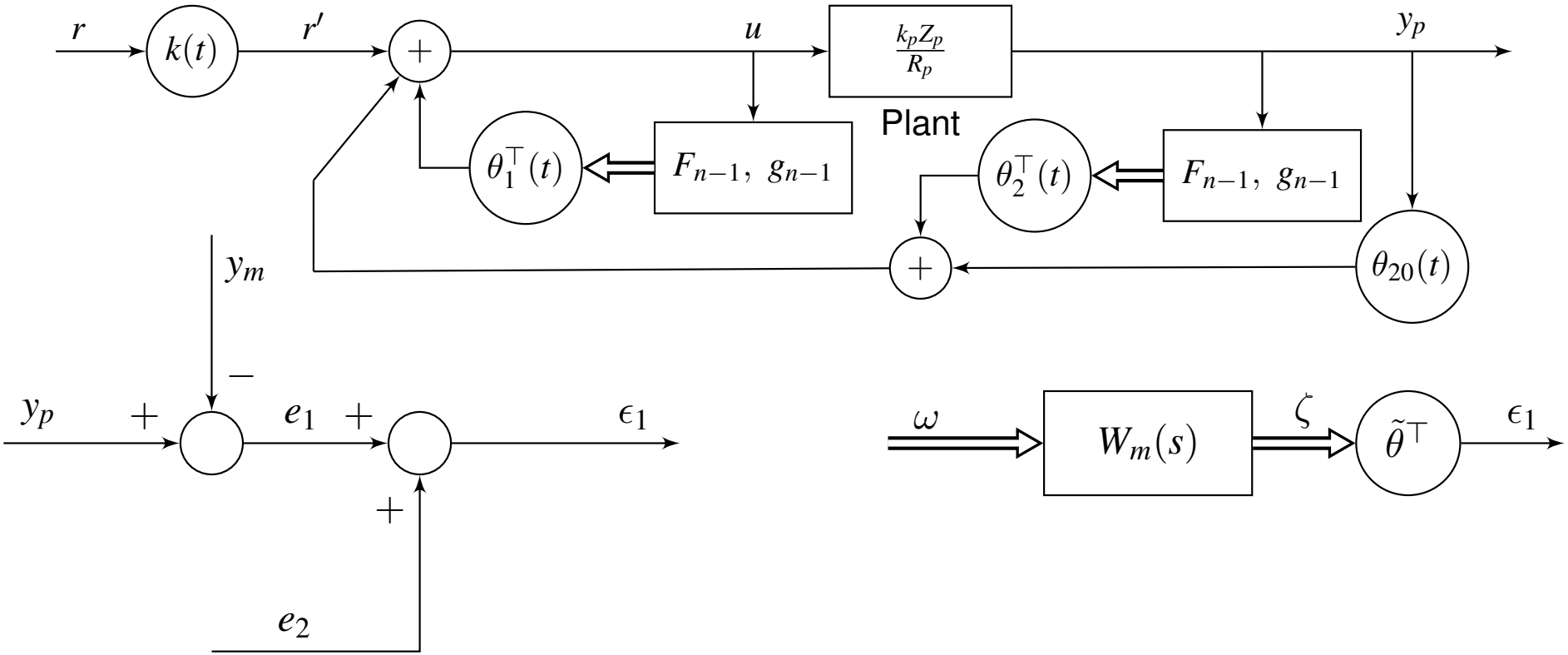

$$
\begin{aligned}
\dot{\theta} &= -\epsilon_1 \zeta \\
V &= \frac{1}{2}\widetilde{\theta}^T \widetilde{\theta} \\
\dot{V} &= -\epsilon_1 \widetilde{\theta}^T \zeta = -\epsilon_1^2 \leq 0
\end{aligned}
$$

Proof of boundedness

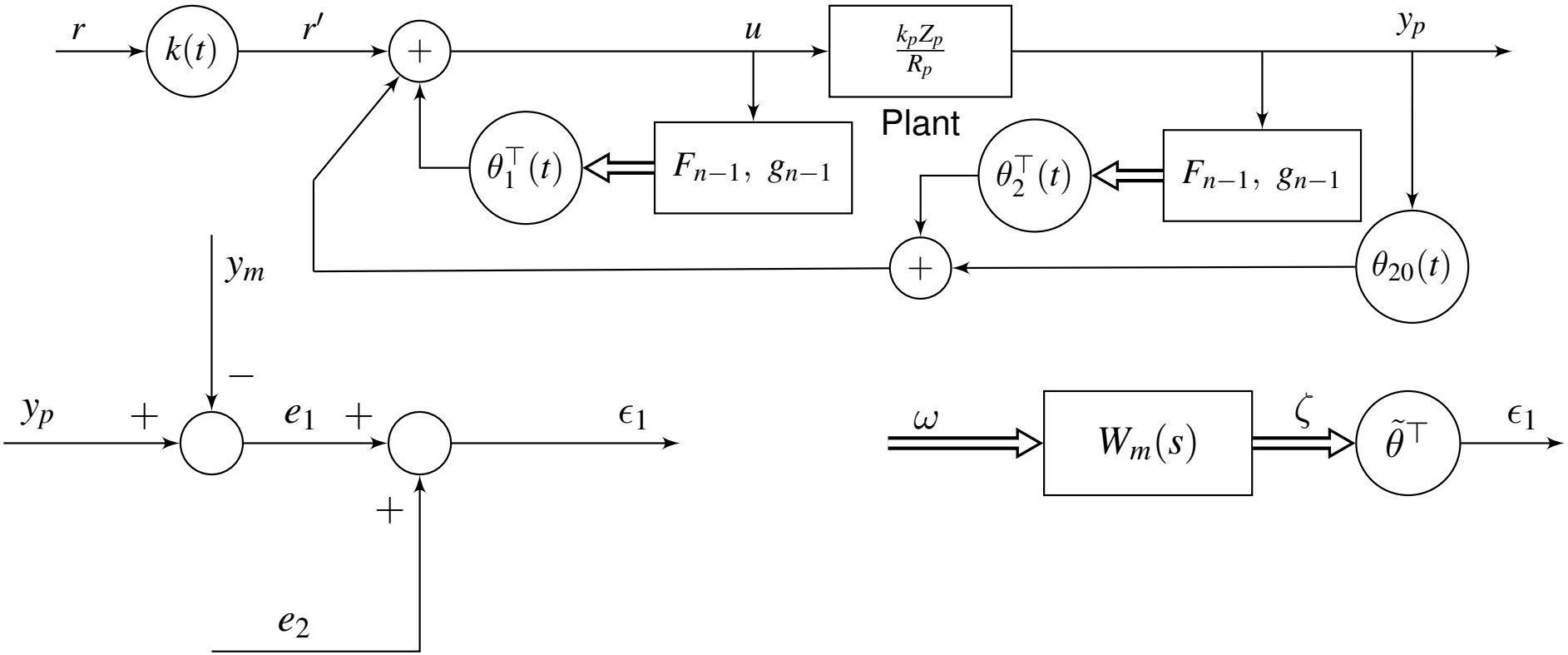

$$
\begin{aligned}
\dot{\theta} &= -\epsilon_1 \zeta \\
V &= \frac{1}{2}\widetilde{\theta}^T \widetilde{\theta} \\
\dot{V} &= -\epsilon_1 \widetilde{\theta}^T \zeta = -\epsilon_1^2 \leq 0 \quad \Longrightarrow \widetilde{\theta} \in \mathcal{L}_\infty
\end{aligned}
$$

Proof of boundedness

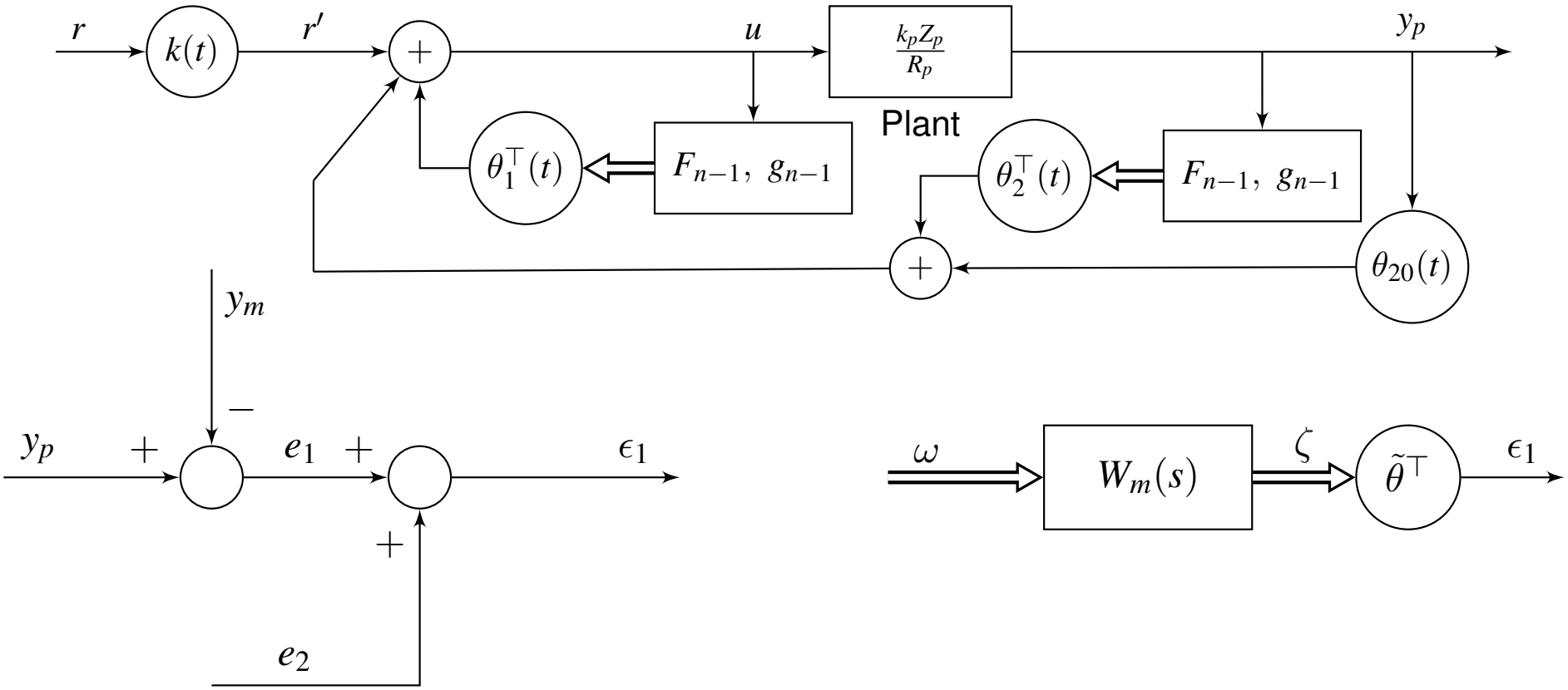

$$\dot{\theta} = -\epsilon_1 \zeta,$$

Proof of boundedness

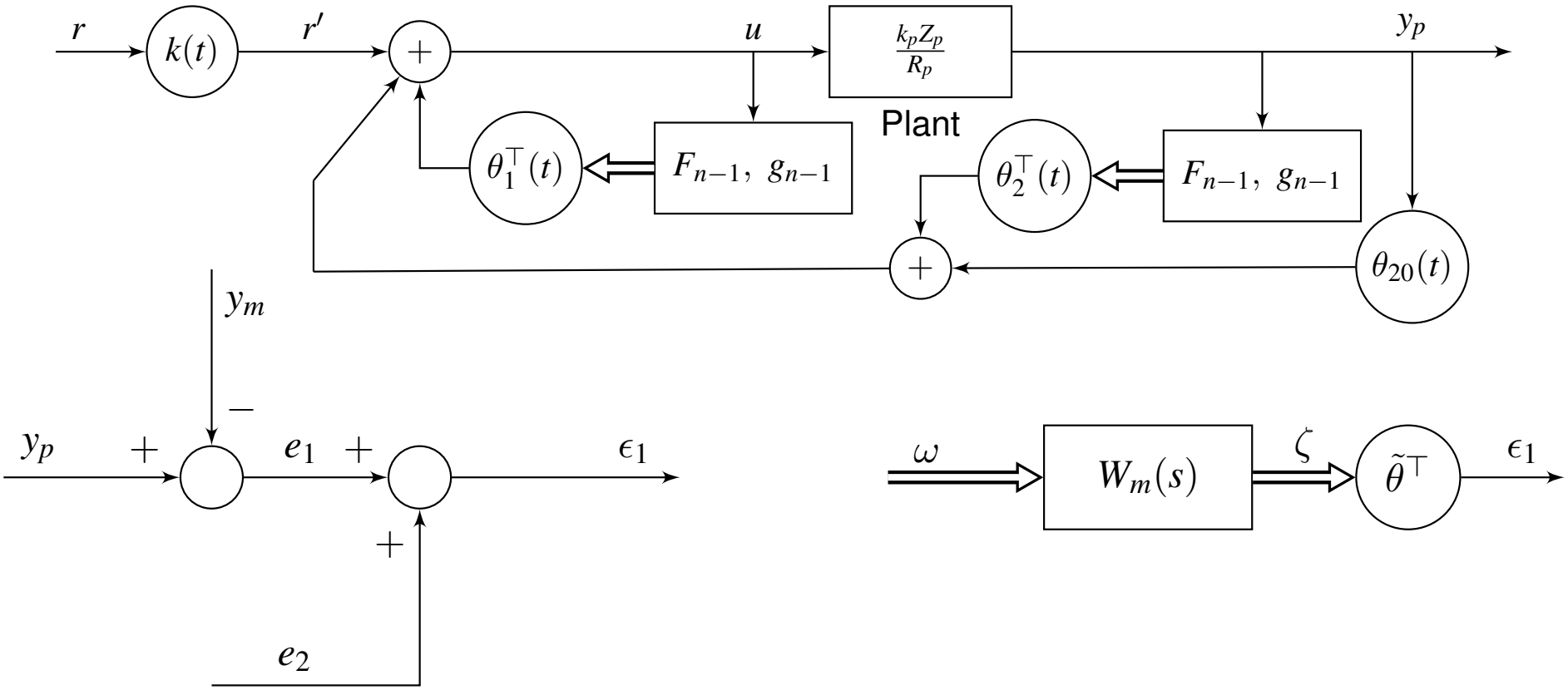

$$\dot{\theta} = -\epsilon_1 \zeta, \quad \not\Longrightarrow \dot{\theta} \in \mathcal{L}_2$$

Proof of boundedness

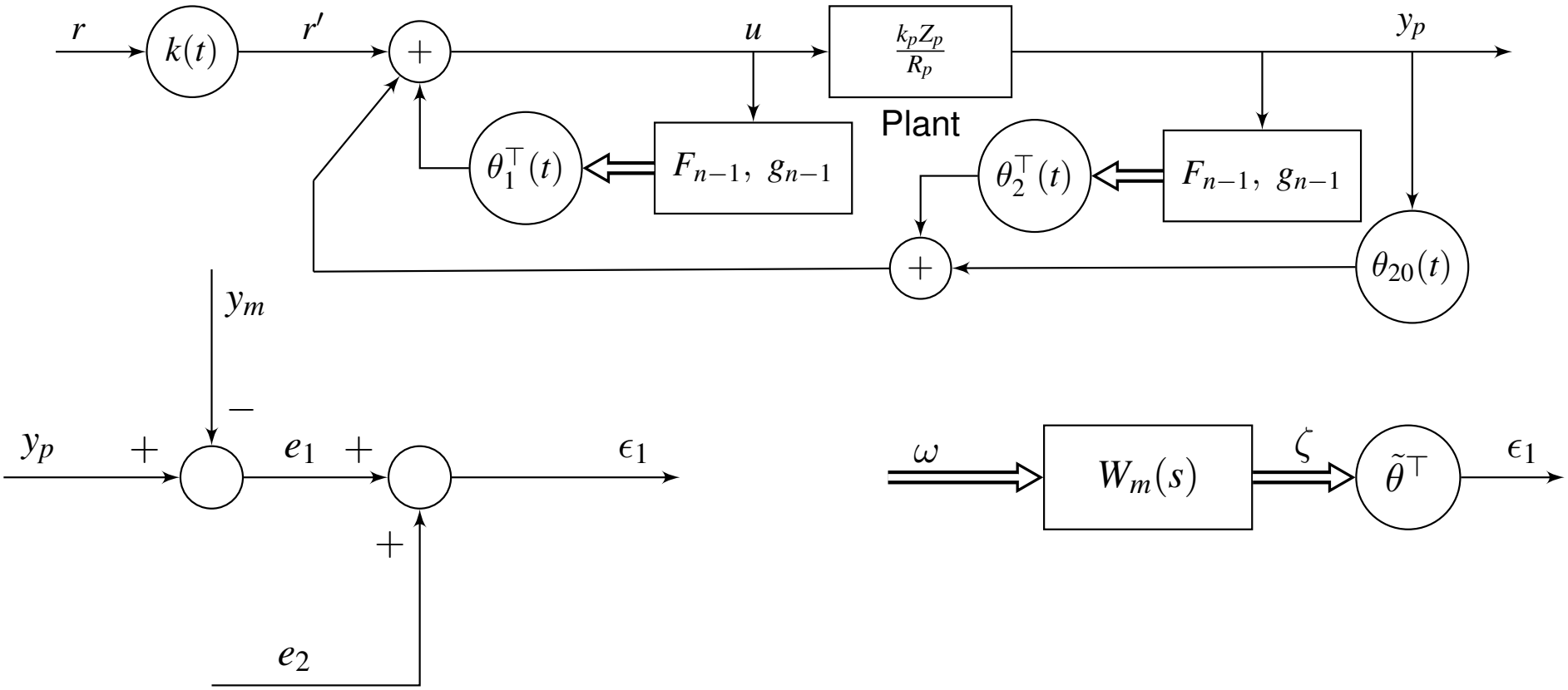

$$\dot{\theta} = -\epsilon_1 \zeta, \quad \not\Longrightarrow \dot{\theta} \in \mathcal{L}_2$$

$$\text{Change to } \dot{\theta} = -\frac{\epsilon_1 \zeta}{1 + \zeta^T \zeta + \omega^T \omega}$$

Proof of boundedness

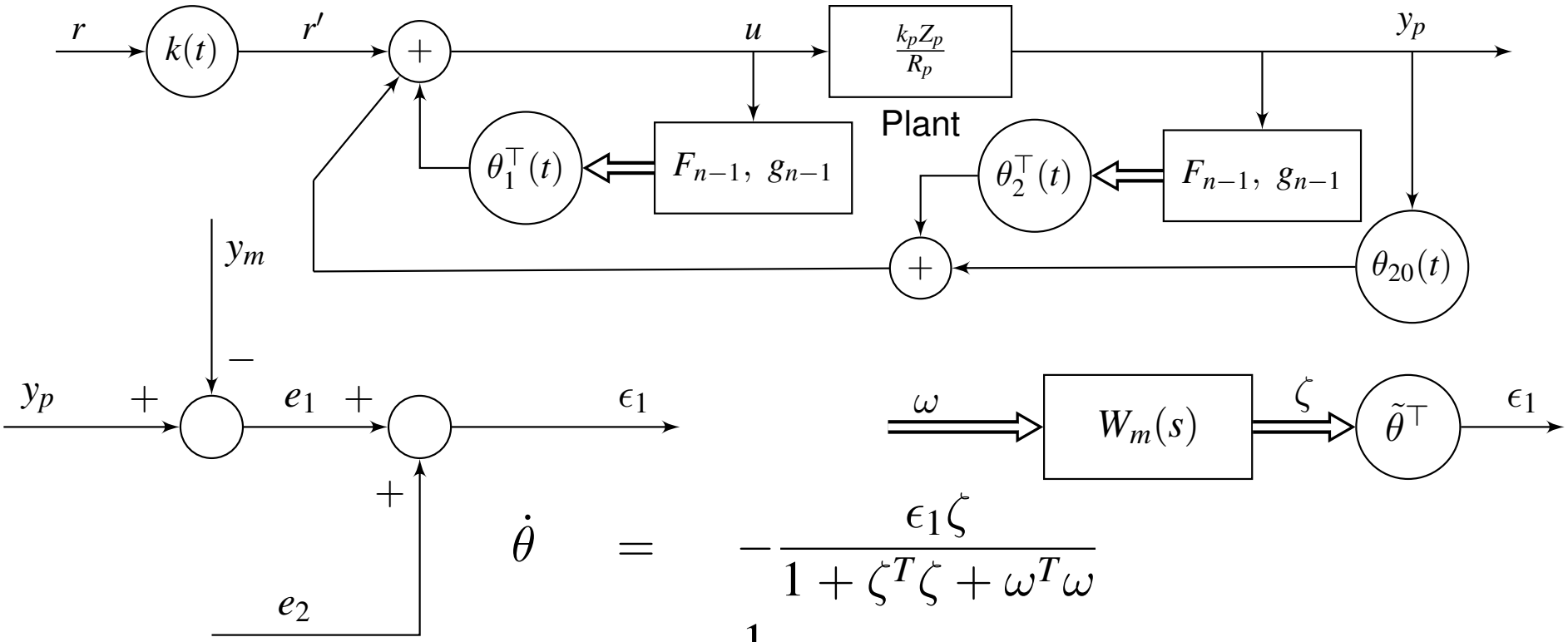

$$\dot{\theta} = -\frac{\epsilon_1 \zeta}{1 + \zeta^T \zeta + \omega^T \omega}$$

$$V = \frac{1}{2} \tilde{\theta}^T \tilde{\theta}$$

$$\dot{V} = -\epsilon_1 \frac{\tilde{\theta}^T \zeta}{1 + \zeta^T \zeta + \omega^T \omega}$$

Proof of boundedness

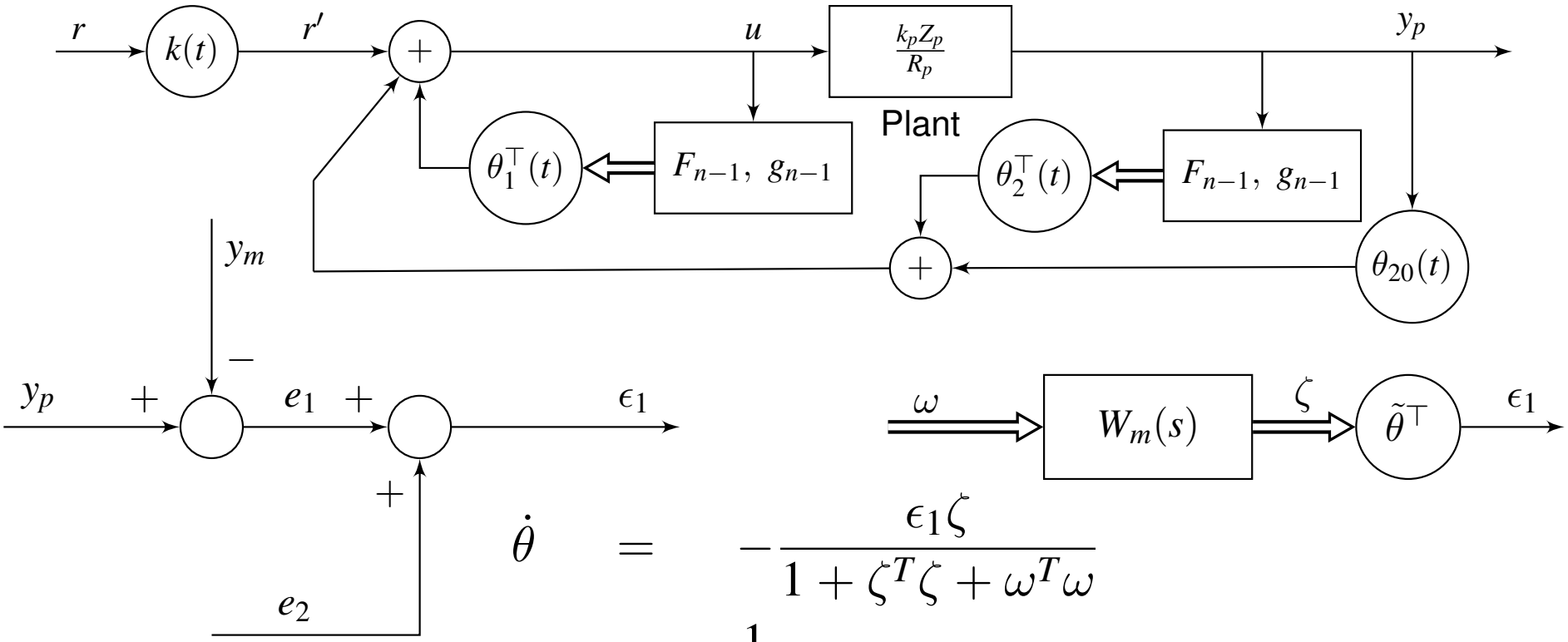

$$\dot{\theta} = -\frac{\epsilon_1 \zeta}{1 + \zeta^T \zeta + \omega^T \omega}$$

$$V = \frac{1}{2} \tilde{\theta}^T \tilde{\theta}$$

$$\dot{V} = -\epsilon_1 \frac{\tilde{\theta}^T \zeta}{1 + \zeta^T \zeta + \omega^T \omega} = -\frac{\epsilon_1^2}{1 + \zeta^T \zeta + \omega^T \omega} \leq$$

Proof of boundedness

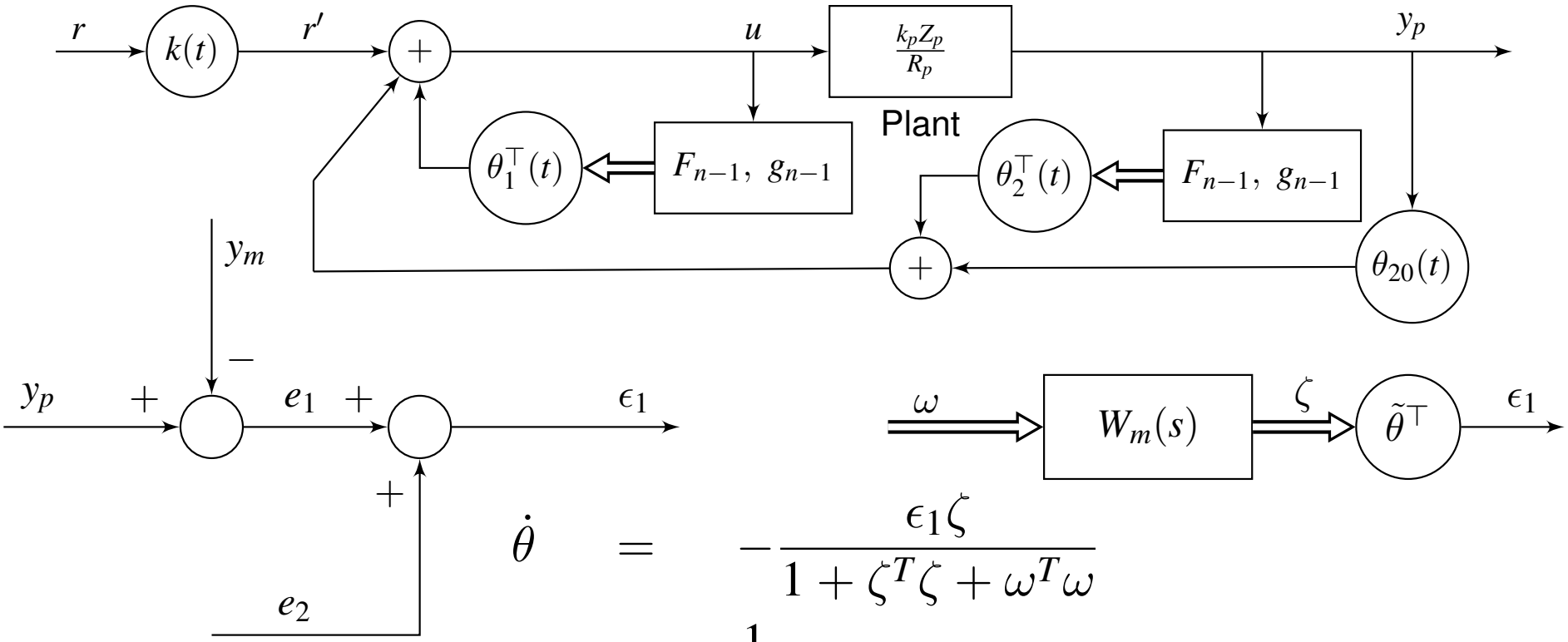

$$\dot{\theta} = -\frac{\epsilon_1 \zeta}{1 + \zeta^T \zeta + \omega^T \omega}$$

$$V = \frac{1}{2} \tilde{\theta}^T \tilde{\theta}$$

$$\dot{V} = -\epsilon_1 \frac{\tilde{\theta}^T \zeta}{1 + \zeta^T \zeta + \omega^T \omega} = -\frac{\epsilon_1^2}{1 + \zeta^T \zeta + \omega^T \omega} \leq$$

$$\Longrightarrow \quad \tilde{\theta} \in \mathcal{L}_\infty,$$

Proof of boundedness

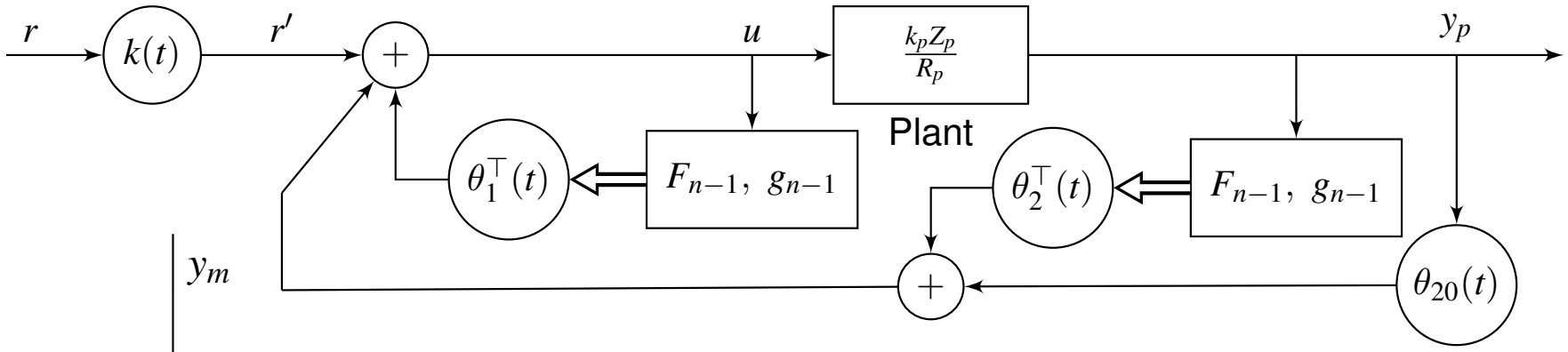

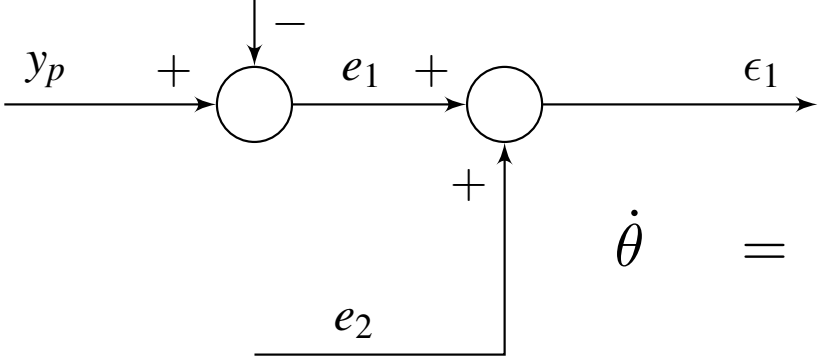

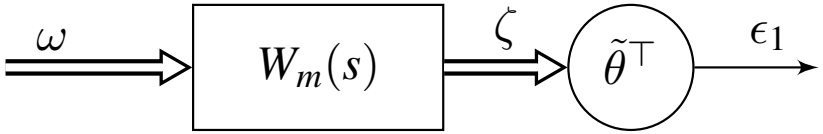

$$\dot{\theta} = -\frac{\epsilon_1 \zeta}{1 + \zeta^T \zeta + \omega^T \omega}$$

$$V = \frac{1}{2} \tilde{\theta}^T \tilde{\theta}$$

$$\dot{V} = -\epsilon_1 \frac{\tilde{\theta}^T \zeta}{1 + \zeta^T \zeta + \omega^T \omega} = -\frac{\epsilon_1^2}{1 + \zeta^T \zeta + \omega^T \omega} \leq$$

$$\Longrightarrow \quad \tilde{\theta} \in \mathcal{L}_\infty, \dot{\tilde{\theta}} \in \mathcal{L}_2$$

Proof of boundedness

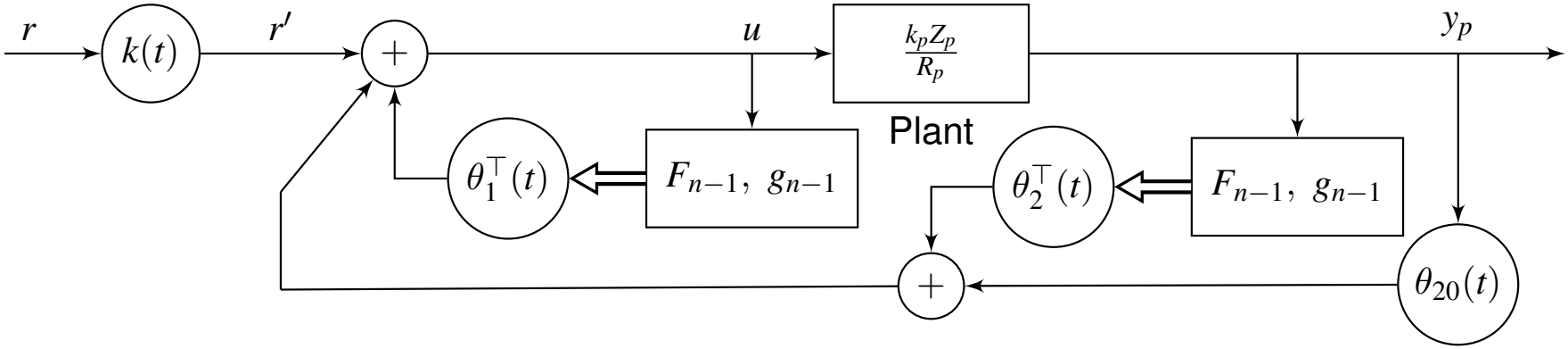

Proof by contradiction.

Proof of boundedness

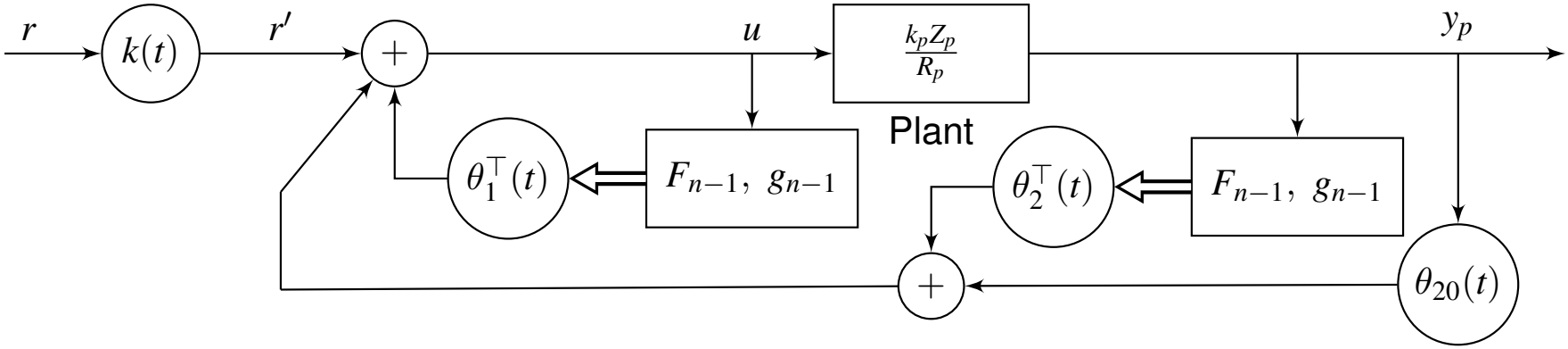

Proof by contradiction. Let all signals grow in an unbounded manner.