2.153 Adaptive Control
Fall 2019
Lecture 6: States Accessible: Adaptive Control

Anuradha Annaswamy

aanna@mit.edu

September 24, 2019

Error model approach

Relation between two main errors in adaptive systems:

Error model approach

Relation between two main errors in adaptive systems: $\widetilde{\theta}$: Parameter error,

Error model approach

Relation between two main errors in adaptive systems: $\widetilde{\theta}$: Parameter error, e: Tracking/Identification Error

Error model approach

Relation between two main errors in adaptive systems: $\widetilde{\theta}$: Parameter error, e: Tracking/Identification Error

The error model provides cues for determining the adaptive law.

Our goal with error models:

Error model approach

Relation between two main errors in adaptive systems: $\widetilde{\theta}$: Parameter error, e: Tracking/Identification Error

The error model provides cues for determining the adaptive law.

Our goal with error models:

- Find an adaptive law for adjusting θ that guarantees stability

Error model approach

Relation between two main errors in adaptive systems: $\widetilde{\theta}$: Parameter error, e: Tracking/Identification Error

The error model provides cues for determining the adaptive law.

Our goal with error models:

- Find an adaptive law for adjusting θ that guarantees stability - depends on the relationship between $\widetilde{\theta}$ and e

Error model approach

Relation between two main errors in adaptive systems: $\widetilde{\theta}$: Parameter error, e: Tracking/Identification Error

The error model provides cues for determining the adaptive law.

Our goal with error models:

- Find an adaptive law for adjusting θ that guarantees stability - depends on the relationship between $\widetilde{\theta}$ and e
- Learn how to prove stability using error models

Error model approach

Relation between two main errors in adaptive systems: $\widetilde{\theta}$: Parameter error, e: Tracking/Identification Error

The error model provides cues for determining the adaptive law.

Our goal with error models:

- Find an adaptive law for adjusting θ that guarantees stability - depends on the relationship between $\widetilde{\theta}$ and e
- Learn how to prove stability using error models
- Attempt to cast new adaptive identification and control problems as one of our error models

Error model approach

Relation between two main errors in adaptive systems: $\widetilde{\theta}$: Parameter error, e: Tracking/Identification Error

The error model provides cues for determining the adaptive law.

Our goal with error models:

- Find an adaptive law for adjusting θ that guarantees stability - depends on the relationship between $\widetilde{\theta}$ and e
- Learn how to prove stability using error models
- Attempt to cast new adaptive identification and control problems as one of our error models

We have seen two error models: Error Model 1 and Error Model 3

Identification of a Vector Parameter - Error Model 1

<u>Error Model 1</u>: $e = \tilde{\theta}^\top u$

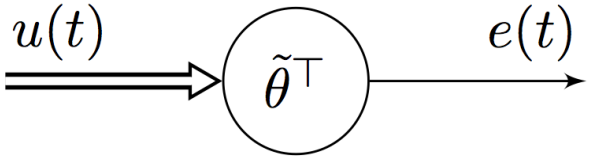

$\widetilde{\theta}$: parameter error

Adaptive law: $\dot{\widetilde{\theta}} = -eu$

Lyapunov function: $V(\widetilde{\theta}) = \frac{1}{2}\widetilde{\theta}^\top\widetilde{\theta}$

$$\begin{aligned} \dot{V} &= \widetilde{\theta}^\top\dot{\widetilde{\theta}} \\ &= -e^2 \leq 0 \end{aligned}$$

$\Rightarrow$ $\widetilde{\theta}(t)$ is bounded for all $t \geq t_0$

Error Model 3:

<u>Error Model 3</u>: $\dot{e} = -ae + \widetilde{\theta}^\top u$

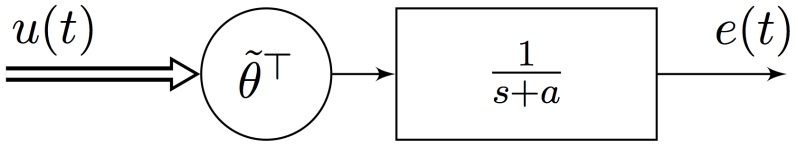

$\widetilde{\theta}$: parameter error

Adaptive law: $$\dot{\widetilde{\theta}} = -eu$$

Lyapunov function: $$V(e, \widetilde{\theta}) = \frac{1}{2}\left(e^2 + \widetilde{\theta}^\top \widetilde{\theta}\right)$$

$$\begin{aligned} \dot{V} &= e\dot{e} + \widetilde{\theta}^\top \dot{\widetilde{\theta}} \\ &= -ae^2 \leq 0 \end{aligned}$$

$\Rightarrow e(t)$ and $\widetilde{\theta}(t)$ are bounded for all $t \geq t_0$

Adaptive Control of a First-Order Plant

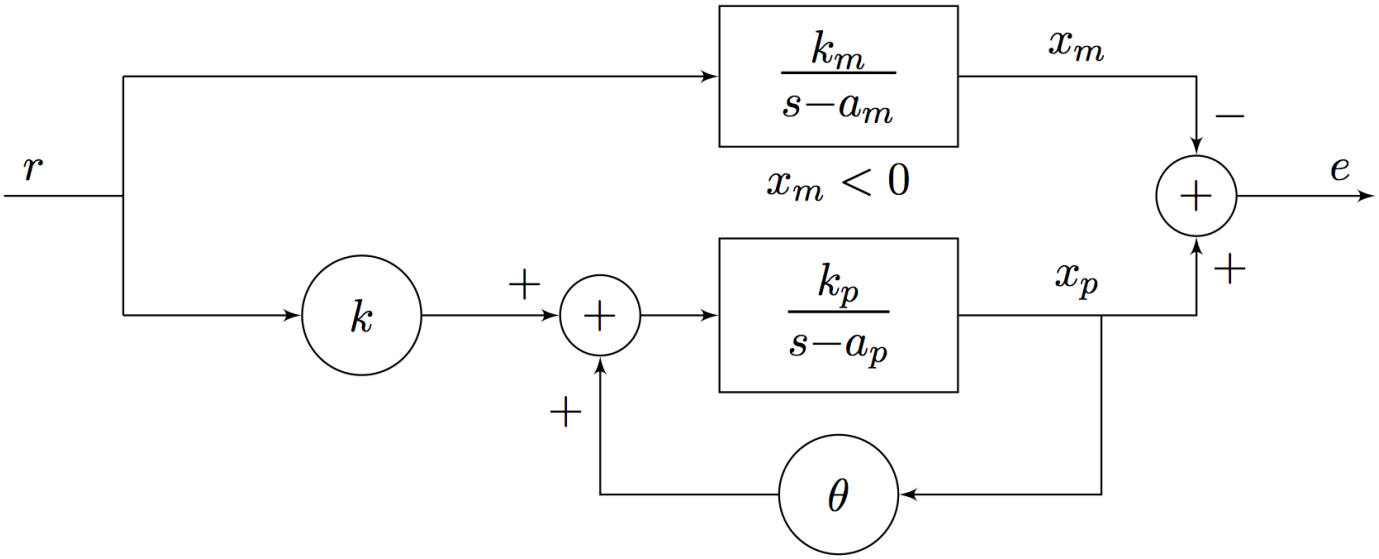

Leads to Error model 3:

$$\dot{e} = a_m e + k_p \tilde{\bar{\theta}}^\top(t)\omega$$

$$\omega = \begin{bmatrix} x_p \\ r \end{bmatrix}, \quad \tilde{\bar{\theta}} = \begin{bmatrix} \tilde{\theta}(t) \\ \tilde{k}(t) \end{bmatrix}$$

Certainty Equivalence Principle - Step 2

$$\text{Error model:} \quad \dot{e} = a_m e + k_p \tilde{\bar{\theta}}^\top(t)\omega$$

$$\text{(slightly modified) Lyapunov function:} \quad V = \frac{1}{2}\left(e^2 + |k_p|\tilde{\bar{\theta}}^\top\tilde{\bar{\theta}}\right)$$

Certainty Equivalence Principle - Step 2

$$\text{Error model:} \quad \dot{e} = a_m e + k_p \tilde{\bar{\theta}}^\top(t)\omega$$

$$\text{(slightly modified) Lyapunov function:} \quad V = \frac{1}{2}\left(e^2 + |k_p|\tilde{\bar{\theta}}^\top\tilde{\bar{\theta}}\right)$$

Leads to

$$\begin{aligned}\dot{V} &= e\dot{e} + |k_p|\tilde{\bar{\theta}}^\top\dot{\tilde{\bar{\theta}}} \\ &= a_m e^2 + \tilde{\bar{\theta}}^\top(k_p e\omega + |k_p|\dot{\tilde{\bar{\theta}}})\end{aligned}$$

Certainty Equivalence Principle - Step 2

$$\text{Error model:} \quad \dot{e} = a_m e + k_p \tilde{\bar{\theta}}^\top(t)\omega$$

$$\text{(slightly modified) Lyapunov function:} \quad V = \frac{1}{2}\left(e^2 + |k_p|\tilde{\bar{\theta}}^\top\tilde{\bar{\theta}}\right)$$

Leads to

$$\begin{aligned}\dot{V} &= e\dot{e} + |k_p|\tilde{\bar{\theta}}^\top\dot{\tilde{\bar{\theta}}} \\ &= a_m e^2 + \tilde{\bar{\theta}}^\top(k_p e\omega + |k_p|\dot{\tilde{\bar{\theta}}})\end{aligned}$$

Adaptive law: $\dot{\tilde{\bar{\theta}}} = -\text{sign}(k_p)e\omega$

$$\dot{V} = a_m e^2 \leq 0$$

$$\Rightarrow e(t) \text{ and } \tilde{\bar{\theta}}(t) \text{ are bounded for all } t \geq t_0$$

Signal Norms

$\mathcal{L}_p$ **Norm**

$$\|x(t)\|_{L_p} = \left(\int_0^t \|x(\tau)\|^p d\tau\right)^{\frac{1}{p}}$$

$\mathcal{L}_1$ **Norm**

$$\|x(t)\|_{L_1} = \int_0^t \|x(\tau)\| d\tau$$

$\mathcal{L}_2$ **Norm**

$$\|x(t)\|_{L_2} = \sqrt{\int_0^t \|x(\tau)\|^2 d\tau}$$

$\mathcal{L}_\infty$ **Norm**

$$\|x(t)\|_{L_\infty} = \sup_t \|x(t)\|$$

$$V > 0, \;\; \dot{V} = a_m e^2 \leq 0 \Rightarrow (i) e \in \mathcal{L}^\infty, \widetilde{\theta} \in \mathcal{L}^\infty, (ii) e \in \mathcal{L}^2$$

Adaptive Control of a First-Order Plant

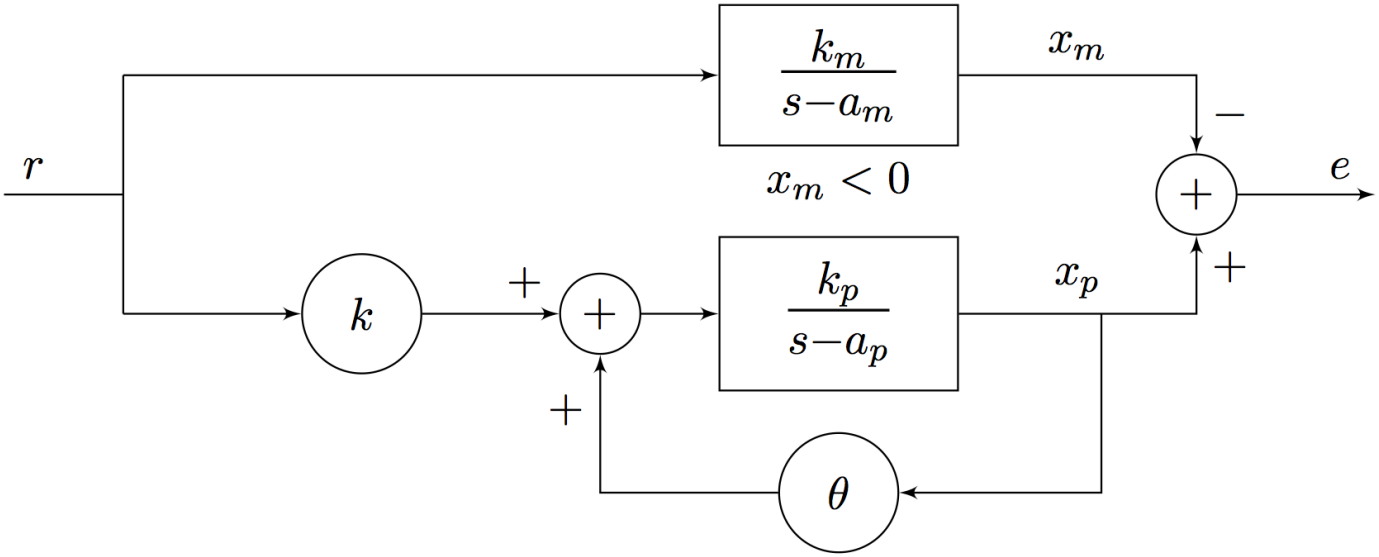

Convergence of e to zero:

- $e \in \mathcal{L}^\infty$ and $\widetilde{\overline{\theta}} \in \mathcal{L}^\infty$

Adaptive Control of a First-Order Plant

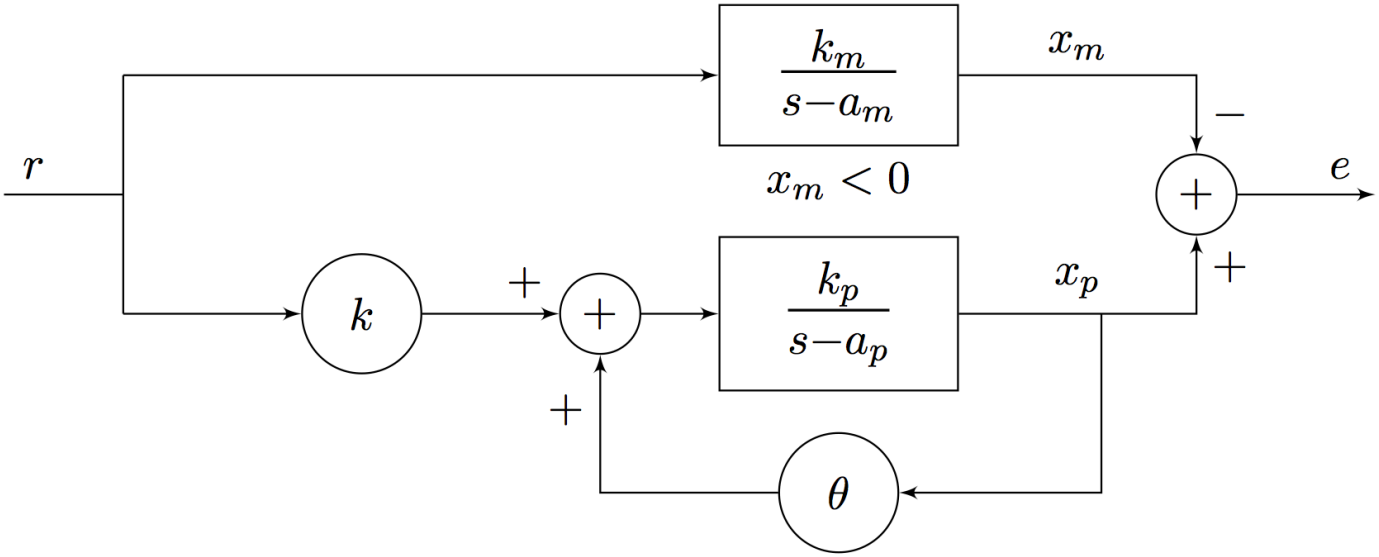

Convergence of e to zero:

- $e \in \mathcal{L}^\infty$ and $\widetilde{\overline{\theta}} \in \mathcal{L}^\infty$
- For all bounded inputs r, x_m is bounded

Adaptive Control of a First-Order Plant

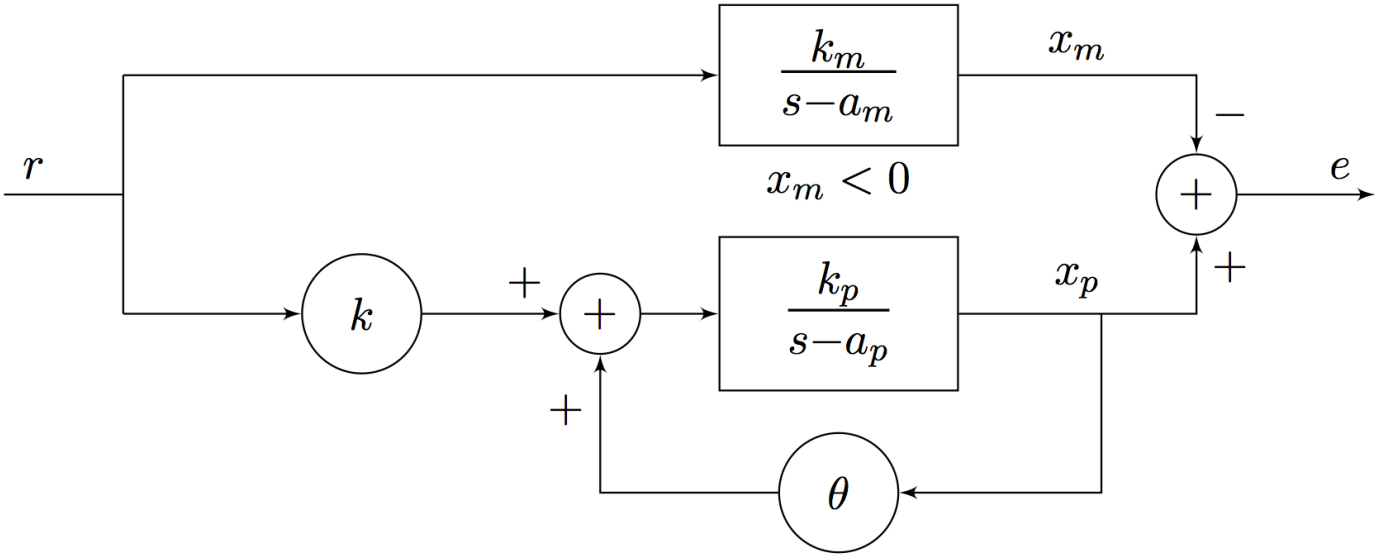

Convergence of e to zero:

- $e \in \mathcal{L}^\infty$ and $\widetilde{\overline{\theta}} \in \mathcal{L}^\infty$
- For all bounded inputs r, x_m is bounded
- $x_p = x_m + e$

Adaptive Control of a First-Order Plant

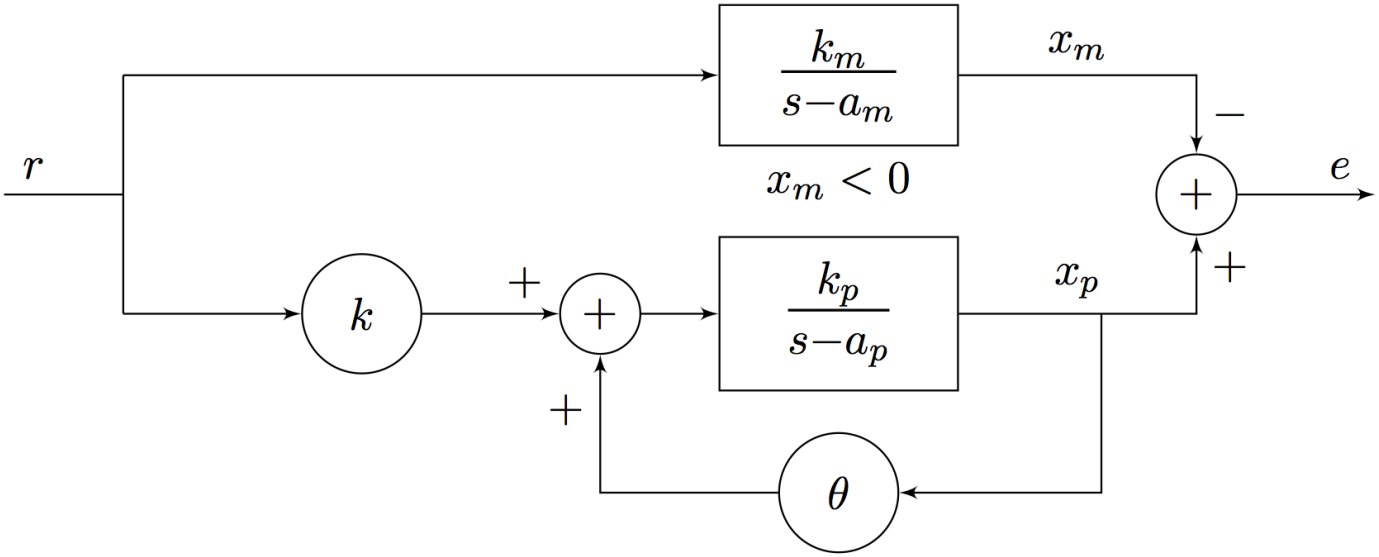

Convergence of e to zero:

- $e \in \mathcal{L}^\infty$ and $\widetilde{\overline{\theta}} \in \mathcal{L}^\infty$
- For all bounded inputs r, x_m is bounded
- $x_p = x_m + e \Rightarrow x_p \in \mathcal{L}^\infty$

Adaptive Control of a First-Order Plant

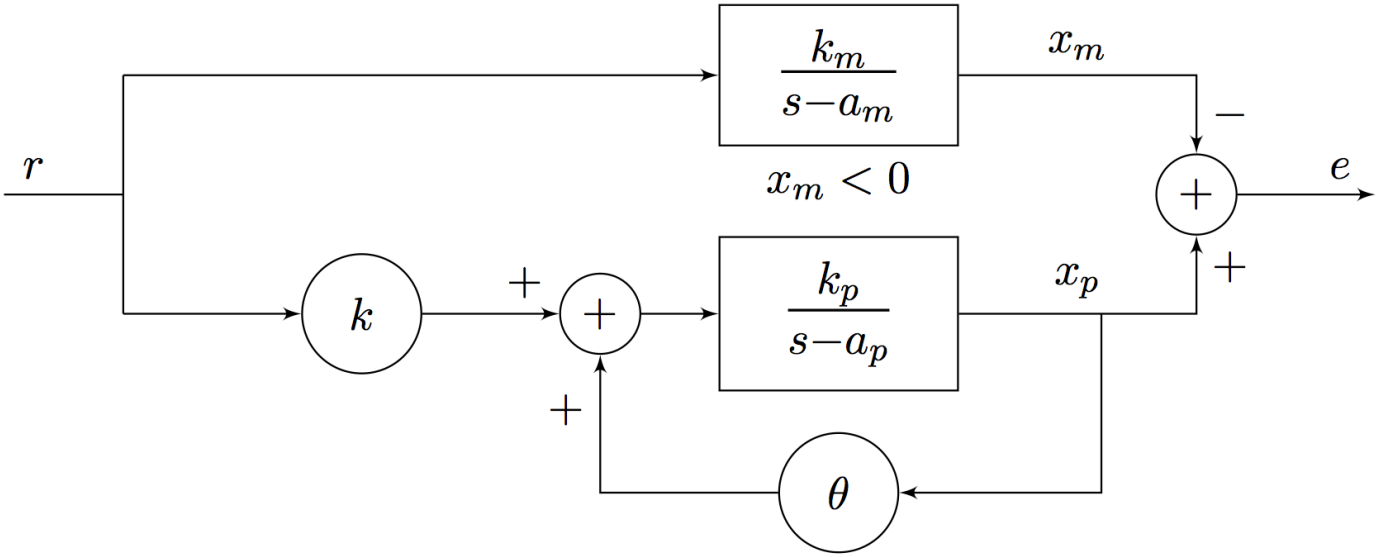

Convergence of e to zero:

- $e \in \mathcal{L}^\infty$ and $\widetilde{\overline{\theta}} \in \mathcal{L}^\infty$
- For all bounded inputs r, x_m is bounded
- $x_p = x_m + e \Rightarrow x_p \in \mathcal{L}^\infty$
- $\dot{V} = a_m e^2 \leq 0 \Rightarrow e \in \mathcal{L}^2$

Adaptive Control of a First-Order Plant

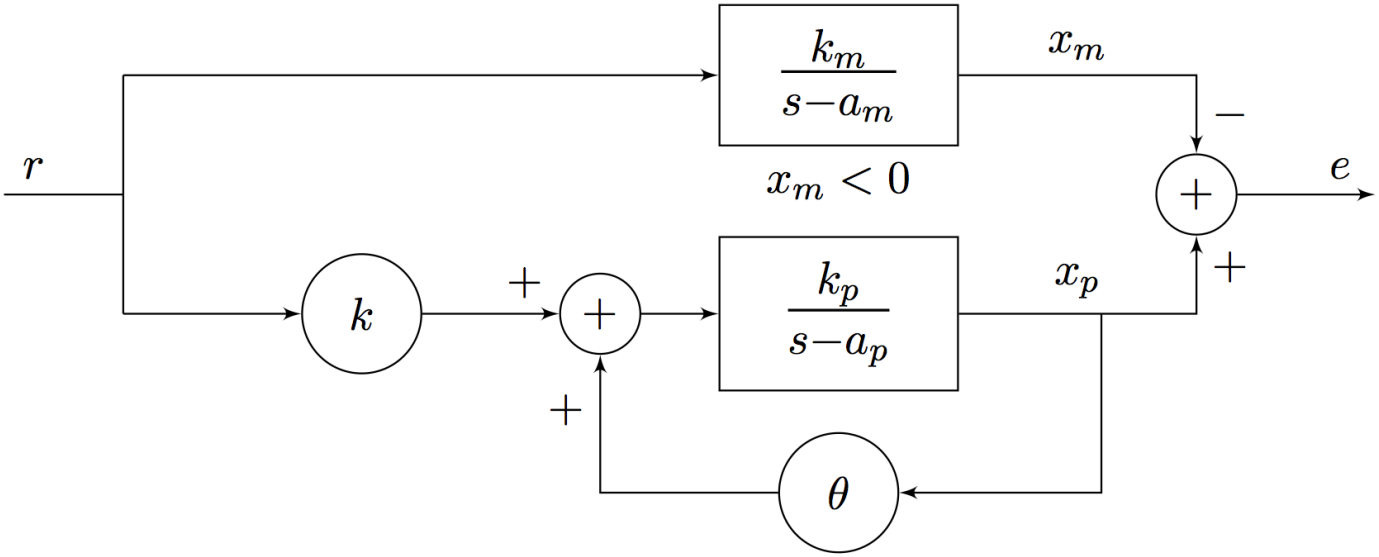

Convergence of e to zero:

- $e \in \mathcal{L}^\infty$ and $\tilde{\bar{\theta}} \in \mathcal{L}^\infty$
- For all bounded inputs r, x_m is bounded
- $x_p = x_m + e \Rightarrow x_p \in \mathcal{L}^\infty$
- $\dot{V} = a_m e^2 \leq 0 \Rightarrow e \in \mathcal{L}^2$
- $\dot{e} = a_m e + k_p \tilde{\bar{\theta}}^\top(t)\omega \Rightarrow \dot{e} \in \mathcal{L}^\infty$

Barbalat's Lemma

Lemma 2.12 (Barbalat's) page 85

(i) If $f : \mathbb{R}^+ \to \mathbb{R}$ is uniformly continuous for $t \geq 0$

(ii) And if $\lim_{t\to\infty} \int_0^t |f(\tau)| d\tau$ exists and is finite

Then $\lim_{t\to\infty} f(t) = 0$

Barbalat's Lemma

Lemma 2.12 (Barbalat's) page 85

(i) If $f : \mathbb{R}^+ \to \mathbb{R}$ is uniformly continuous for $t \geq 0$

(ii) And if $\lim_{t\to\infty} \int_0^t |f(\tau)| d\tau$ exists and is finite

Then $\lim_{t\to\infty} f(t) = 0$

Corollary If $g \in \mathcal{L}^2 \cap \mathcal{L}^\infty$, and $\dot{g}$ is bounded, then $\lim_{t\to\infty} g(t) = 0$.

Barbalat's Lemma

Lemma 2.12 (Barbalat's) page 85

(i) If $f : \mathbb{R}^+ \to \mathbb{R}$ is uniformly continuous for $t \geq 0$

(ii) And if $\lim_{t\to\infty} \int_0^t |f(\tau)| d\tau$ exists and is finite

Then $\lim_{t\to\infty} f(t) = 0$

Corollary If $g \in \mathcal{L}^2 \cap \mathcal{L}^\infty$, and $\dot{g}$ is bounded, then $\lim_{t\to\infty} g(t) = 0$.

- $e \in \mathcal{L}^\infty$ and $\widetilde{\theta} \in \mathcal{L}^\infty$

Barbalat's Lemma

Lemma 2.12 (Barbalat's) page 85

(i) If $f : \mathbb{R}^+ \to \mathbb{R}$ is uniformly continuous for $t \geq 0$

(ii) And if $\lim_{t\to\infty} \int_0^t |f(\tau)| d\tau$ exists and is finite

Then $\lim_{t\to\infty} f(t) = 0$

Corollary If $g \in \mathcal{L}^2 \cap \mathcal{L}^\infty$, and $\dot{g}$ is bounded, then $\lim_{t\to\infty} g(t) = 0$.

- $e \in \mathcal{L}^\infty$ and $\widetilde{\theta} \in \mathcal{L}^\infty$
- $\dot{V} = a_m e^2 \leq 0 \Rightarrow e \in \mathcal{L}^2$

Barbalat's Lemma

Lemma 2.12 (Barbalat's) page 85

(i) If $f : \mathbb{R}^+ \to \mathbb{R}$ is uniformly continuous for $t \geq 0$

(ii) And if $\lim_{t\to\infty} \int_0^t |f(\tau)| d\tau$ exists and is finite

Then $\lim_{t\to\infty} f(t) = 0$

Corollary If $g \in \mathcal{L}^2 \cap \mathcal{L}^\infty$, and $\dot{g}$ is bounded, then $\lim_{t\to\infty} g(t) = 0$.

- $e \in \mathcal{L}^\infty$ and $\widetilde{\theta} \in \mathcal{L}^\infty$
- $\dot{V} = a_m e^2 \leq 0 \Rightarrow e \in \mathcal{L}^2$
- $\dot{e} = a_m e + k_p \widetilde{\overline{\theta}}^\top(t)\omega \Rightarrow \dot{e} \in \mathcal{L}^\infty$

Barbalat's Lemma

Lemma 2.12 (Barbalat's) page 85

(i) If $f : \mathbb{R}^+ \to \mathbb{R}$ is uniformly continuous for $t \geq 0$

(ii) And if $\lim_{t\to\infty} \int_0^t |f(\tau)| d\tau$ exists and is finite

Then $\lim_{t\to\infty} f(t) = 0$

Corollary If $g \in \mathcal{L}^2 \cap \mathcal{L}^\infty$, and $\dot{g}$ is bounded, then $\lim_{t\to\infty} g(t) = 0$.

- $e \in \mathcal{L}^\infty$ and $\widetilde{\theta} \in \mathcal{L}^\infty$
- $\dot{V} = a_m e^2 \leq 0 \Rightarrow e \in \mathcal{L}^2$
- $\dot{e} = a_m e + k_p \widetilde{\overline{\theta}}^\top(t)\omega \Rightarrow \dot{e} \in \mathcal{L}^\infty$
- Barbalat's lemma $\Rightarrow \lim_{t\to\infty} e(t) = 0$

Next topic

Adaptive Control of Higher Order Plants (with a single input)

Example

$$m\ddot{x} + b\dot{x} + kx = u$$

m, b, k unknown. Find u so that (i)$x(t) \to 0$, or (ii) $x(t) \to x_m$

Example

$$m\ddot{x} + b\dot{x} + kx = u$$

m, b, k unknown. Find u so that (i)$x(t) \to 0$, or (ii) $x(t) \to x_m$

$$X_p = \begin{bmatrix} x \\ \dot{x} \end{bmatrix} \qquad \dot{X}_p = A_p X_p + b_p u$$

$$A_p = \begin{bmatrix} 0 & 1 \\ -\dfrac{k}{m} & -\dfrac{b}{m} \end{bmatrix} \qquad b_p = \begin{bmatrix} 0 \\ \dfrac{1}{m} \end{bmatrix}$$

States Accessible - Stabilization

$$\text{Plant:} \qquad \dot{X}_p = A_p X_p + b_p u$$

$$\text{Reference Model:} \qquad \ddot{x}_m + 2\zeta\omega_n \dot{x}_m + \omega_n^2 x_m = \omega_n^2 r$$

$$X_m = \begin{bmatrix} x_m \\ \dot{x}_m \end{bmatrix}, \qquad A_m = \begin{bmatrix} 0 & 1 \\ -\omega_n^2 & -2\zeta\omega_n \end{bmatrix} \qquad b_m = \begin{bmatrix} 0 \\ \omega_n^2 \end{bmatrix}$$

$$e = X_p - X_m$$

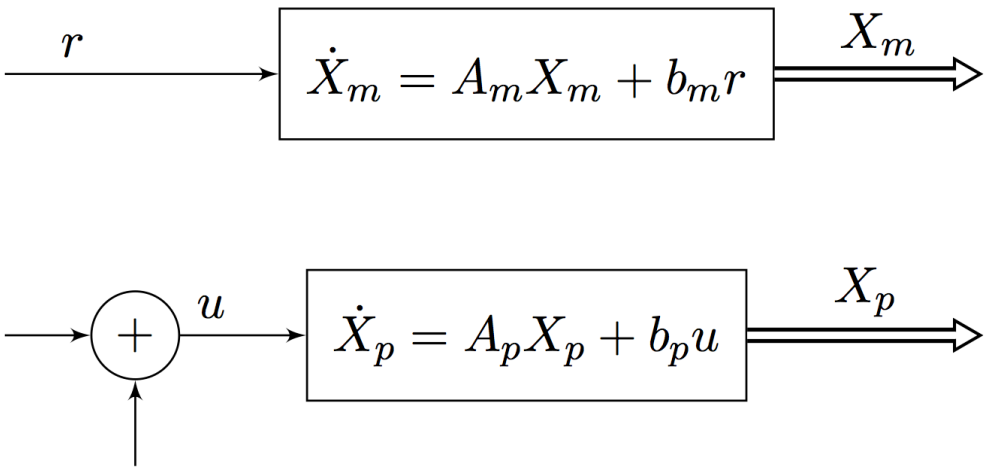

Choose u so that $e(t) \to 0$ as $t \to \infty$. b_p, A_p are unknown.

Certainty Equivalence Principle - b_p known

Step 1: Algebraic Part: Find a solution to the problem when parameters are known.

$$\text{Plant:} \quad \dot{X}_p = \quad A_p X_p + b_p u$$

Certainty Equivalence Principle - b_p known

Step 1: Algebraic Part: Find a solution to the problem when parameters are known.

$$\begin{aligned} \text{Plant:} \quad \dot{X}_p &= A_p X_p + b_p u \\ \text{Controller:} \quad u &= \theta_c^T X_p + r \end{aligned}$$

Certainty Equivalence Principle - b_p known

Step 1: Algebraic Part: Find a solution to the problem when parameters are known.

$$\begin{aligned}
\text{Plant:} \quad \dot{X}_p &= A_p X_p + b_p u \\
\text{Controller:} \quad u &= \theta_c^T X_p + r \\
\text{Closed-loop:} \quad \dot{X}_p &= \left[A_p + b_p \theta_c^T\right] X_p + b_p r
\end{aligned}$$

Certainty Equivalence Principle - b_p known

Step 1: Algebraic Part: Find a solution to the problem when parameters are known.

$$\begin{aligned}
\text{Plant:} \quad \dot{X}_p &= A_p X_p + b_p u \\
\text{Controller:} \quad u &= \theta_c^T X_p + r \\
\text{Closed-loop:} \quad \dot{X}_p &= \left[A_p + b_p \theta_c^T\right] X_p + b_p r
\end{aligned}$$

$$\text{Matching conditions:} \quad A_p + b_p \theta^{*T} = A_m$$

Certainty Equivalence Principle - b_p known

Step 1: Algebraic Part: Find a solution to the problem when parameters are known.

$$
\begin{aligned}
\text{Plant:} \quad \dot{X}_p &= A_p X_p + b_p u \\
\text{Controller:} \quad u &= \theta_c^T X_p + r \\
\text{Closed-loop:} \quad \dot{X}_p &= \left[A_p + b_p \theta_c^T\right] X_p + b_p r \\
\text{Matching conditions:} \quad & A_p + b_p \theta^{*T} = A_m \\
\text{Solution:} \quad & \theta_c = \theta^*
\end{aligned}
$$

Certainty Equivalence Principle - b_p known

Step 1: Algebraic Part: Find a solution to the problem when parameters are known.

$$\begin{aligned}
\text{Plant:} \quad \dot{X}_p &= A_p X_p + b_p u \\
\text{Controller:} \quad u &= \theta_c^T X_p + r \\
\text{Closed-loop:} \quad \dot{X}_p &= \left[A_p + b_p \theta_c^T\right] X_p + b_p r
\end{aligned}$$

$$\text{Matching conditions:} \quad A_p + b_p \theta^{*T} = A_m$$

$$\text{Solution:} \quad \theta_c = \theta^*$$

Step 2: Analytic Part:

$$\begin{aligned}
\text{Controller:} \quad u &= \theta^T(t) X_p + r \\
\text{Closed-loop:} \quad \dot{X}_p &= \left[A_p + b_p \theta^T(t)\right] X_p + b_p r \\
&= A_m X_p + b_p \widetilde{\theta}^T X_p + b_p r
\end{aligned}$$

Lyapunov functions and Linear Time-invariant Systems (see section 2.4.4)

LTI System: $\dot{x} = A_m x$

Lyapunov functions and Linear Time-invariant Systems (see section 2.4.4)

$$\begin{aligned} \text{LTI System:} \quad \dot{x} &= A_m x \\ V &= \left(x^T P x\right) \end{aligned}$$

Lyapunov functions and Linear Time-invariant Systems (see section 2.4.4)

$$
\begin{aligned}
\text{LTI System:} \quad \dot{x} &= A_m x \\
V &= \left(x^T P x\right) \\
\dot{V} &= x^T [A_m^T P + P A_m] x
\end{aligned}
$$

Lyapunov functions and Linear Time-invariant Systems (see section 2.4.4)

$$
\begin{aligned}
\text{LTI System:} \quad \dot{x} &= A_m x \\
V &= \left(x^T P x\right) \\
\dot{V} &= x^T [A_m^T P + P A_m] x \\
&\leq -x^T Q x \leq 0
\end{aligned}
$$

Error Model 2

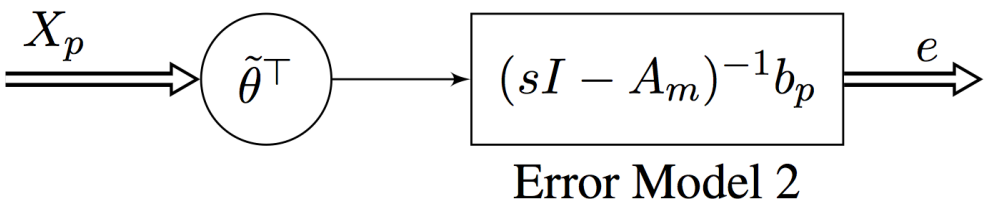

Error equation: $\dot{e} = A_m e + b_p \widetilde{\theta}^T X_p$

Error Model 2

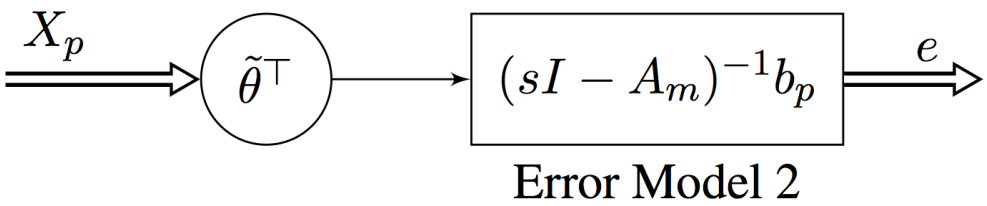

Error equation:

$$\begin{aligned} \dot{e} &= A_m e + b_p \widetilde{\theta}^T X_p \\ V &= \left(e^T P e + \widetilde{\theta}^T \widetilde{\theta} \right) \\ \dot{V} &= e^T [A_m^T P + P A_m] e + 2 e^T P b_p \, \widetilde{\theta}^T X_p + 2 \widetilde{\theta}^T \dot{\widetilde{\theta}} \end{aligned}$$

Error Model 2

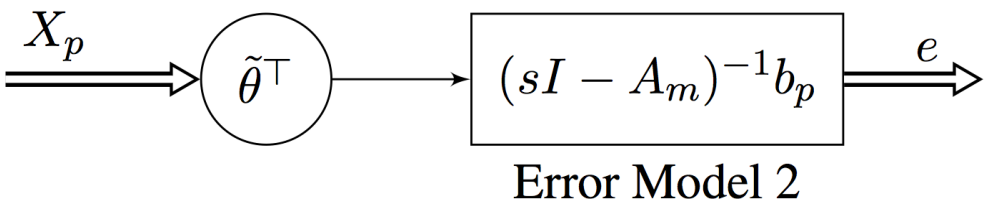

Error equation:

$$\begin{aligned}
\dot{e} &= A_m e + b_p \widetilde{\theta}^T X_p \\
V &= \left(e^T P e + \widetilde{\theta}^T \widetilde{\theta}\right) \\
\dot{V} &= e^T [A_m^T P + P A_m] e + 2 e^T P b_p \, \widetilde{\theta}^T X_p + 2 \widetilde{\theta}^T \dot{\widetilde{\theta}} \\
&= -e^T Q e \qquad \text{If } \dot{\widetilde{\theta}} = -e^T P b_p \, X_p
\end{aligned}$$

Error Model 2

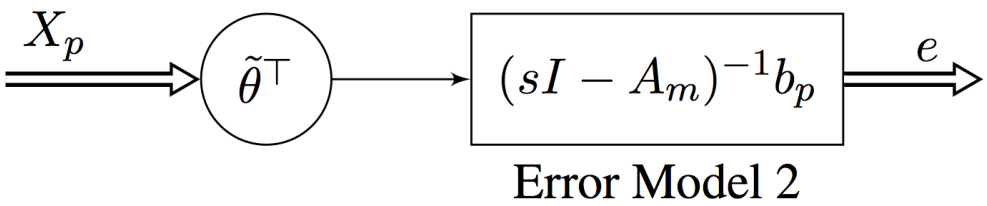

Error equation:

$$\begin{aligned}
\dot{e} &= A_m e + b_p \widetilde{\theta}^T X_p \\
V &= \left(e^T P e + \widetilde{\theta}^T \widetilde{\theta}\right) \\
\dot{V} &= e^T [A_m^T P + P A_m] e + 2 e^T P b_p \, \widetilde{\theta}^T X_p + 2 \widetilde{\theta}^T \dot{\widetilde{\theta}} \\
&= -e^T Q e \qquad \text{If } \dot{\widetilde{\theta}} = -e^T P b_p \, X_p \\
&\leq 0
\end{aligned}$$

$\Rightarrow e(t)$ and $\widetilde{\theta}(t)$ are bounded for all $t \geq t_0$

Error Model 2

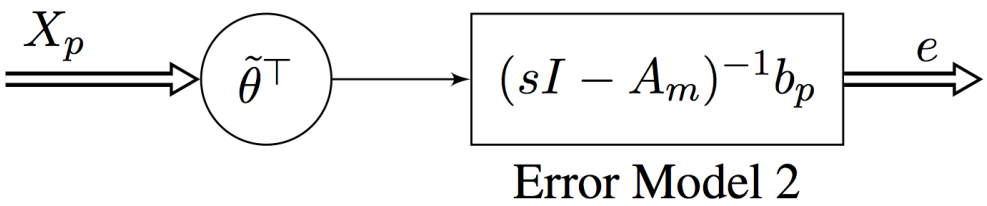

Error equation:

$$\begin{aligned}
\dot{e} &= A_m e + b_p \widetilde{\theta}^T X_p \\
V &= \left(e^T P e + \widetilde{\theta}^T \widetilde{\theta}\right) \\
\dot{V} &= e^T [A_m^T P + P A_m] e + 2 e^T P b_p \, \widetilde{\theta}^T X_p + 2 \widetilde{\theta}^T \dot{\widetilde{\theta}} \\
&= -e^T Q e \qquad \text{If } \dot{\widetilde{\theta}} = -e^T P b_p \, X_p \\
&\leq 0
\end{aligned}$$

$\Rightarrow e(t)$ and $\widetilde{\theta}(t)$ are bounded for all $t \geq t_0$

$\lim_{t \to \infty} e(t) = 0$ from Barbalat's Lemma

Certainty Equivalence Principle - b_p unknown

Step 1: Algebraic Part:

$$\begin{aligned}
\text{Plant:} \quad \dot{X}_p &= A_p X_p + b_p u \\
\text{Controller:} \quad u &= \theta_c^T X_p + k_c r \\
\text{Closed-loop:} \quad \dot{X}_p &= \left[A_p + b_p \theta_c^T\right] X_p + b_p k_c r
\end{aligned}$$

Certainty Equivalence Principle - b_p unknown

Step 1: Algebraic Part:

$$\begin{aligned}
\text{Plant:} \quad \dot{X}_p &= A_p X_p + b_p u \\
\text{Controller:} \quad u &= \theta_c^T X_p + k_c r \\
\text{Closed-loop:} \quad \dot{X}_p &= \left[A_p + b_p \theta_c^T\right] X_p + b_p k_c r
\end{aligned}$$

Matching conditions: $A_p + b_p \theta^{*T} = A_m;\ b_p k^* = b_m$

Certainty Equivalence Principle - b_p unknown

Step 1: Algebraic Part:

$$
\begin{aligned}
\text{Plant:} \quad \dot{X}_p &= A_p X_p + b_p u \\
\text{Controller:} \quad u &= \theta_c^T X_p + k_c r \\
\text{Closed-loop:} \quad \dot{X}_p &= \left[A_p + b_p \theta_c^T\right] X_p + b_p k_c r
\end{aligned}
$$

Matching conditions: $A_p + b_p \theta^{*T} = A_m;\ b_p k^* = b_m$

Solution: $\theta_c = \theta^*, \quad k_c = k^*$

Certainty Equivalence Principle - b_p unknown

Step 1: Algebraic Part:

$$\begin{aligned}
\text{Plant:} \quad \dot{X}_p &= A_p X_p + b_p u \\
\text{Controller:} \quad u &= \theta_c^T X_p + k_c r \\
\text{Closed-loop:} \quad \dot{X}_p &= \left[A_p + b_p \theta_c^T\right] X_p + b_p k_c r
\end{aligned}$$

$$\text{Matching conditions:} \quad A_p + b_p \theta^{*T} = A_m; \; b_p k^* = b_m$$

$$\text{Solution:} \quad \theta_c = \theta^*, \;\; k_c = k^*$$

Step 2: Analytic Part:

$$\text{Controller:} \quad u = \theta^T(t) X_p + k(t) r$$

Certainty Equivalence Principle - b_p unknown

Step 1: Algebraic Part:

$$\begin{aligned}
\text{Plant:} \quad \dot{X}_p &= A_p X_p + b_p u \\
\text{Controller:} \quad u &= \theta_c^T X_p + k_c r \\
\text{Closed-loop:} \quad \dot{X}_p &= \left[A_p + b_p \theta_c^T\right] X_p + b_p k_c r
\end{aligned}$$

$$\text{Matching conditions:} \quad A_p + b_p \theta^{*T} = A_m; \; b_p k^* = b_m$$

$$\text{Solution:} \quad \theta_c = \theta^*, \;\; k_c = k^*$$

Step 2: Analytic Part:

$$\begin{aligned}
\text{Controller:} \quad u &= \theta^T(t) X_p + k(t) r \\
\text{Closed-loop:} \quad \dot{X}_p &= \left[A_p + b_p \theta^T(t)\right] X_p + b_p (k^* + \widetilde{k}) r
\end{aligned}$$

Certainty Equivalence Principle - b_p unknown

Step 1: Algebraic Part:

$$\begin{aligned}
\text{Plant:} \quad \dot{X}_p &= A_p X_p + b_p u \\
\text{Controller:} \quad u &= \theta_c^T X_p + k_c r \\
\text{Closed-loop:} \quad \dot{X}_p &= \left[A_p + b_p \theta_c^T\right] X_p + b_p k_c r
\end{aligned}$$

$$\text{Matching conditions:} \quad A_p + b_p \theta^{*T} = A_m; \; b_p k^* = b_m$$

$$\text{Solution:} \quad \theta_c = \theta^*, \;\; k_c = k^*$$

Step 2: Analytic Part:

$$\begin{aligned}
\text{Controller:} \quad u &= \theta^T(t) X_p + k(t) r \\
\text{Closed-loop:} \quad \dot{X}_p &= \left[A_p + b_p \theta^T(t)\right] X_p + b_p (k^* + \widetilde{k}) r \\
&= A_m X_p + b_p \left(\widetilde{\theta}^T X_p + \widetilde{k} r\right) + b_m r
\end{aligned}$$

Error Model 2

Error equation: $\dot{e} = A_m e + b_p \left(\widetilde{\theta}^T X_p + \widetilde{k} r \right)$

Error Model 2

$$
\begin{aligned}
\text{Error equation:} \quad \dot{e} &= A_m e + b_p \left(\widetilde{\theta}^T X_p + \widetilde{k} r \right) \\
V &= e^T P e + \widetilde{\theta}^T \widetilde{\theta} + \widetilde{k}^2 \\
\dot{V} &= e^T [A_m^T P + P A_m] e + 2 e^T P b_p \, \widetilde{\theta}^T X_p + 2 \widetilde{\theta}^T \dot{\widetilde{\theta}} \\
&\qquad + 2 e^T P b_p \, \widetilde{k} r + 2 \widetilde{k} \dot{\widetilde{k}} \\
&= -e^T Q e \qquad \text{if } \dot{\widetilde{\theta}} = -e^T P b_p \, X_p, \; \dot{\widetilde{k}} = -e^T P b_p \, r
\end{aligned}
$$

But b_p is unknown.

Error Model 2

Error equation: $\dot{e} = A_m e + b_p \left(\widetilde{\theta}^T X_p + \widetilde{k} r \right)$

$$
\begin{aligned}
V &= e^T P e + \widetilde{\theta}^T \widetilde{\theta} + \widetilde{k}^2 \\
\dot{V} &= e^T [A_m^T P + P A_m] e + 2 e^T P b_p \, \widetilde{\theta}^T X_p + 2 \widetilde{\theta}^T \dot{\widetilde{\theta}} \\
&\qquad + 2 e^T P b_p \, \widetilde{k} r + 2 \widetilde{k} \dot{\widetilde{k}} \\
&= -e^T Q e \qquad \text{if } \dot{\widetilde{\theta}} = -e^T P b_p \, X_p, \; \dot{\widetilde{k}} = -e^T P b_p \, r
\end{aligned}
$$

But b_p is unknown. $\underline{b_p = k^* b_m}$

Error Model 2

$$\text{Error equation:} \quad \dot{e} = A_m e + b_p \left(\widetilde{\theta}^T X_p + \widetilde{k} r \right)$$

$$\begin{aligned} V &= e^T P e + \widetilde{\theta}^T \widetilde{\theta} + \widetilde{k}^2 \\ \dot{V} &= e^T [A_m^T P + P A_m] e + 2 e^T P b_p \, \widetilde{\theta}^T X_p + 2 \widetilde{\theta}^T \dot{\widetilde{\theta}} \\ &\qquad + 2 e^T P b_p \, \widetilde{k} r + 2 \widetilde{k} \dot{\widetilde{k}} \\ &= -e^T Q e \qquad \text{if } \dot{\widetilde{\theta}} = -e^T P b_p \, X_p, \; \dot{\widetilde{k}} = -e^T P b_p \, r \end{aligned}$$

But b_p is unknown. $\underline{b_p = k^* b_m}$

$$\begin{aligned} \text{Choose } \dot{\widetilde{\theta}} &= -sign(k^*) e^T P b_m \, X_p, \; \dot{\widetilde{k}} = -sign(k^*) e^T P b_m \, r \\ \Rightarrow \; V &= \frac{1}{2} \left(e^T P e + |k^*| \left(\widetilde{\theta}^T \widetilde{\theta} + \widetilde{k}^2 \right) \right), \; \dot{V} = -e^T Q e \leq 0 \end{aligned}$$

$\Rightarrow e(t), \widetilde{\theta}(t),$ and $\widetilde{k}(t)$ are bounded for all $t \geq t_0$

Overall Adaptive System

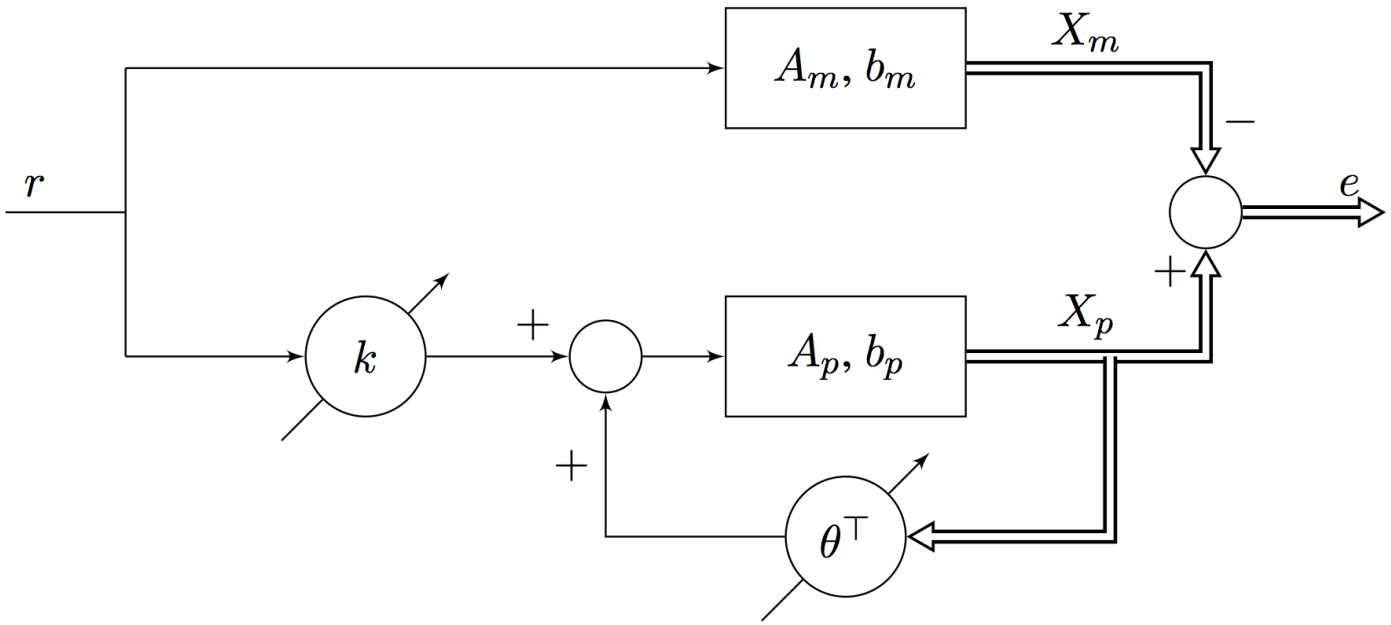

$$b_p k^* = b_m \qquad A_p + b_p \theta^{*\top} = A_m$$

$$\dot{\theta} = -sign(k^*) e^\top P b_m X_p$$
$$\dot{k} = -sign(k^*) e^\top P b_m r$$