2.153 Adaptive Control
Fall 2019
Lecture 3: Simple Adaptive Systems: Control

Anuradha Annaswamy

aanna@mit.edu

September 11, 2019

Stability

Behavior near an Equilibrium Point.

Stability

Behavior near an Equilibrium Point.
Consider the following dynamical system

$$\begin{aligned} \dot{x}(t) &= f(x(t), t) \\ x(t_0) &= x_0 \end{aligned} \tag{1}$$

Definition: equilibrium point (pg 45) The state x_{eq} is an *equilibrium point* of (1) if it satisfies:

$$f(x_{\text{eq}}, t) = 0 \tag{2}$$

for all $t \geq t_0$.

Stability of LTI Plants

A motivating example: determine the stability of the origin for the following system

$$\dot{x}(t) = Ax(t)$$

Equilibrium point: $x = 0$

Stability of LTI Plants

A motivating example: determine the stability of the origin for the following system

$$\dot{x}(t) = Ax(t)$$

Equilibrium point: $x = 0$
Can determine the stability of the origin by evaluating eigenvalues of A

$$x(t) = e^{A(t-t_0)}x(t_0)$$

$$A = V\Lambda V^{-1}; \;\; V : \text{from eigenvector}; \;\; \Lambda : diag(\lambda_i) : \text{from eigenvalues}$$

Stability follows if $Re(\lambda_i) \leq 0$
Asymptotic stability follows if $Re(\lambda_i) < 0$.

Stability of LTI Plants

A motivating example: determine the stability of the origin for the following system

$$\dot{x}(t) = Ax(t)$$

Equilibrium point: $x = 0$
Can determine the stability of the origin by evaluating eigenvalues of A

$$x(t) = e^{A(t-t_0)}x(t_0)$$

$$A = V\Lambda V^{-1}; \;\; V : \text{from eigenvector}; \;\; \Lambda : diag(\lambda_i) : \text{from eigenvalues}$$

Stability follows if $Re(\lambda_i) \leq 0$
Asymptotic stability follows if $Re(\lambda_i) < 0$.

Lyapunov's methods allow us to determine the stability of an equilibrium for such a system without solving the differential equation!

Lyapunov Stability

For the system

$$\dot{x} = f(x)$$

Let

(i) $V(x) > 0,\ \forall x \neq 0, \text{and } V(0) = 0$

(ii) $\dot{V}(x) = \left(\frac{\partial V}{\partial x}\right)^T f(x) < 0$

(iii) $V(x) \to \infty \text{ as } \|x\| \to \infty$

Then $x = 0$ is asymptotically stable.

Lyapunov Stability

For the system

$$\dot{x} = f(x)$$

Let

(i) $V(x) > 0, \ \forall x \neq 0, \text{and } V(0) = 0$

(ii) $\dot{V}(x) = \left(\frac{\partial V}{\partial x}\right)^T f(x) < 0$

(iii) $V(x) \to \infty \text{ as } \|x\| \to \infty$

Then $x = 0$ is asymptotically stable.

If instead of (ii), we have

- (ii') $\dot{V} \leq 0$

Then $x = 0$ is stable.

Error Model 1

Error Model 1 leads to the following

$$\dot{x}(t) = A(t)x(t) \quad A(t) = -u(t)u^T(t)$$

Equilibrium point: $x = 0$

Error Model 1

Error Model 1 leads to the following

$$\dot{x}(t) = A(t)x(t) \quad A(t) = -u(t)u^T(t)$$

Equilibrium point: $x = 0$
Choose a quadratic function

$$\begin{aligned} V &= \frac{1}{2}x^T x \\ \dot{V} &= x^T A(t)x = -x^T u(t)u^T(t)x = -\left(x^T u(t)\right)^2 \leq 0 \end{aligned}$$

Error Model 1

Error Model 1 leads to the following

$$\dot{x}(t) = A(t)x(t) \quad A(t) = -u(t)u^T(t)$$

Equilibrium point: $x = 0$
Choose a quadratic function

$$\begin{aligned} V &= \frac{1}{2}x^T x \\ \dot{V} &= x^T A(t)x = -x^T u(t)u^T(t)x = -\left(x^T u(t)\right)^2 \leq 0 \end{aligned}$$

$\Rightarrow$ stability.

Error Model 1

Error Model 1 leads to the following

$$\dot{x}(t) = A(t)x(t) \quad A(t) = -u(t)u^T(t)$$

Equilibrium point: $x = 0$
Choose a quadratic function

$$\begin{aligned} V &= \frac{1}{2}x^T x \\ \dot{V} &= x^T A(t)x = -x^T u(t)u^T(t)x = -\left(x^T u(t)\right)^2 \leq 0 \end{aligned}$$

$\Rightarrow$ stability.
A later lecture will show that if $u(t)$ is " persistently exciting", $x(t) \to 0$.

Error Model 1

Error Model 1 leads to the following

$$\dot{x}(t) = A(t)x(t) \quad A(t) = -u(t)u^T(t)$$

Equilibrium point: $x = 0$
Choose a quadratic function

$$\begin{aligned} V &= \frac{1}{2}x^T x \\ \dot{V} &= x^T A(t)x = -x^T u(t)u^T(t)x = -\left(x^T u(t)\right)^2 \leq 0 \end{aligned}$$

$\Rightarrow$ stability.
A later lecture will show that if $u(t)$ is " persistently exciting", $x(t) \to 0$.
We therefore conclude that error model 1 leads to a stable parameter estimation. Asymptotic stability will be shown later.

Adaptive Control of a First-Order Plant

Problem:

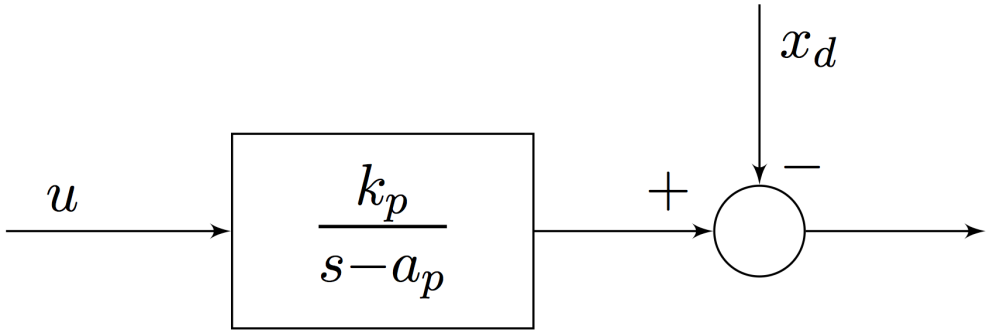

Plant:

$$\dot{x}_p = a_p x_p + k_p u$$

Find u such that x_p follows a desired command.

A Model-reference Approach

x_p: Output of a first-order system - can only follow 'smooth' signals
Pose the problem as

$$\dot{x}_m = a_m x_m + k_m r$$

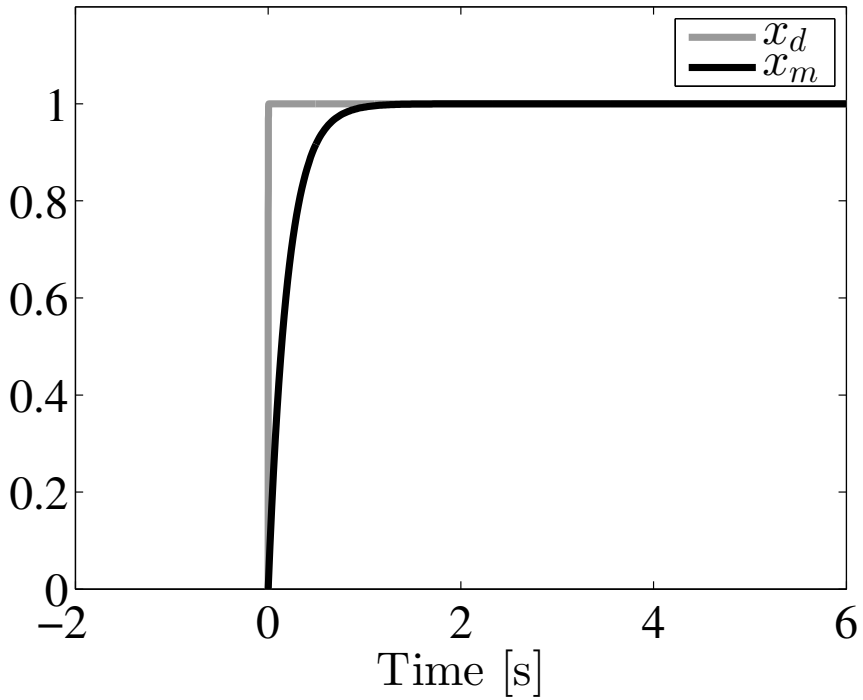

Set $a_m = -5$ and $k_m = 5$.

A Model-reference Approach

x_p: Output of a first-order system - can only follow 'smooth' signals
Pose the problem as

$$\dot{x}_m = a_m x_m + k_m r$$

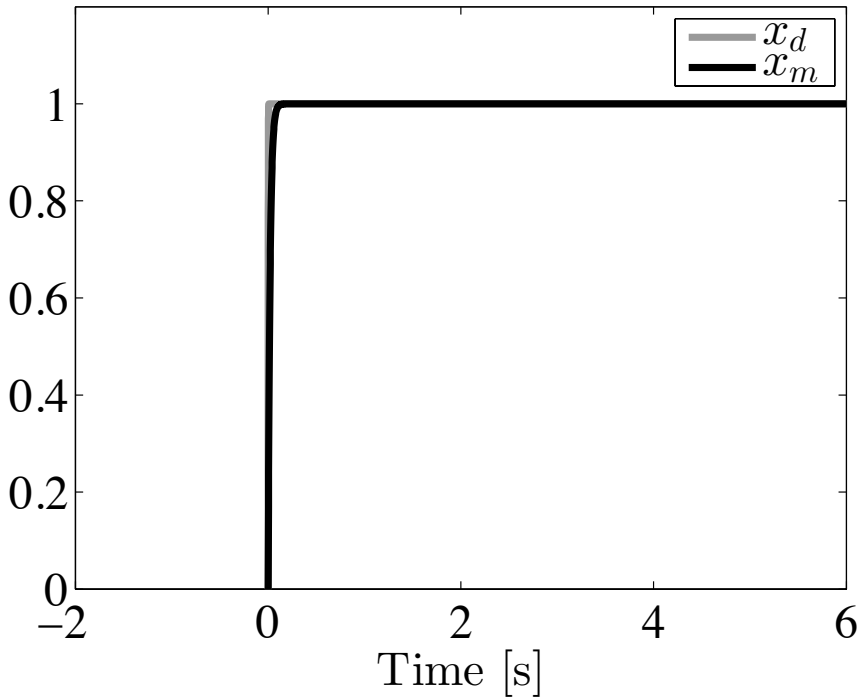

Set $a_m = -5$ and $k_m = 5$. Or $a_m = -50$, $k_m = 50$, Choose r so that $x_m \approx x_d$

Statement of the problem

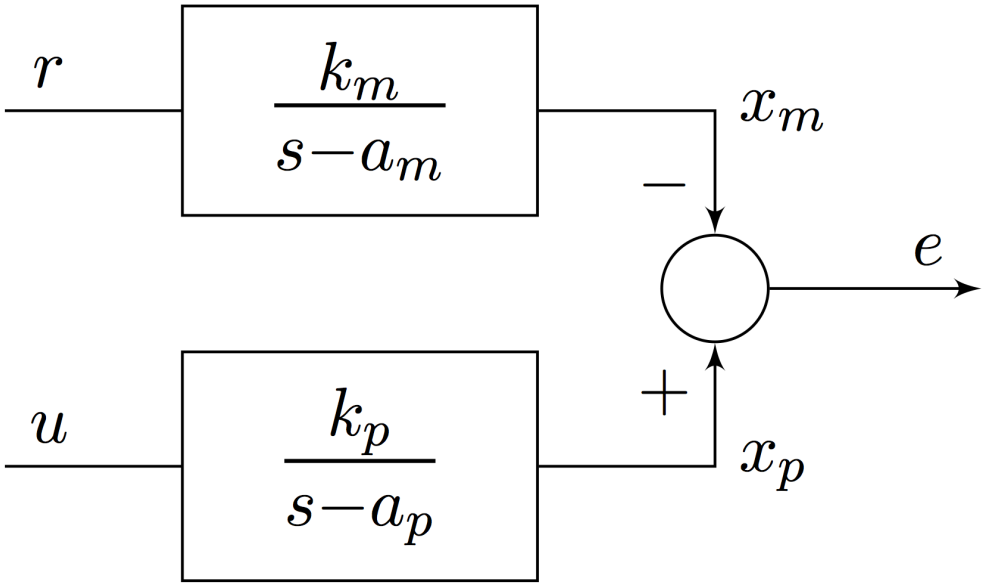

Choose u so that $e(t) \to 0$ as $t \to \infty$.

Statement of the problem

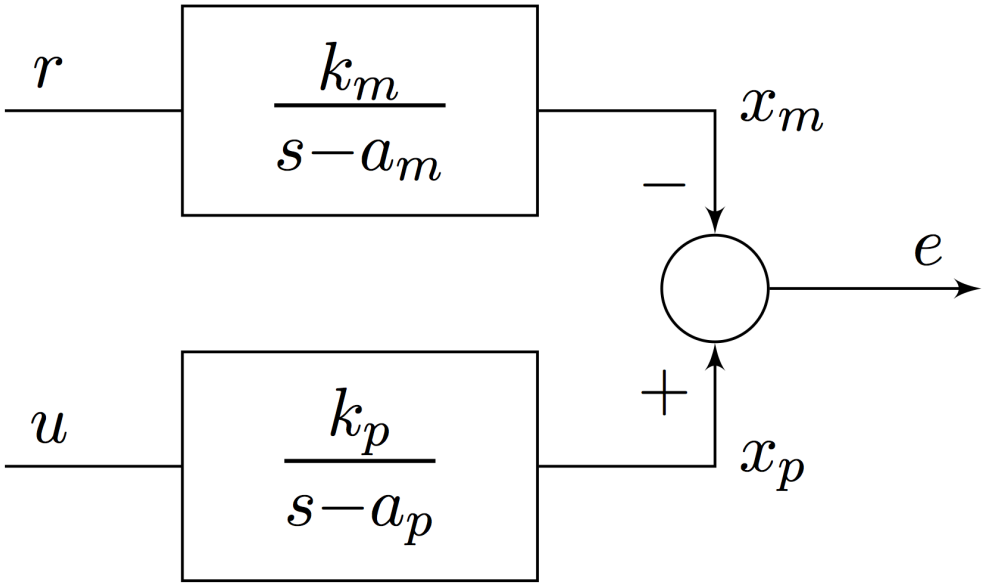

Choose u so that $e(t) \to 0$ as $t \to \infty$. $\underline{k_p, a_p \text{ are unknown.}}$

Certainty Equivalence Principle

Step 1: Algebraic Part: Find a solution to the problem when parameters are known.

Certainty Equivalence Principle

Step 1: Algebraic Part: Find a solution to the problem when parameters are known.

Step 2: Analytic Part: Replace the unknown parameters by their estimates. Ensure stable and convergent behavior.

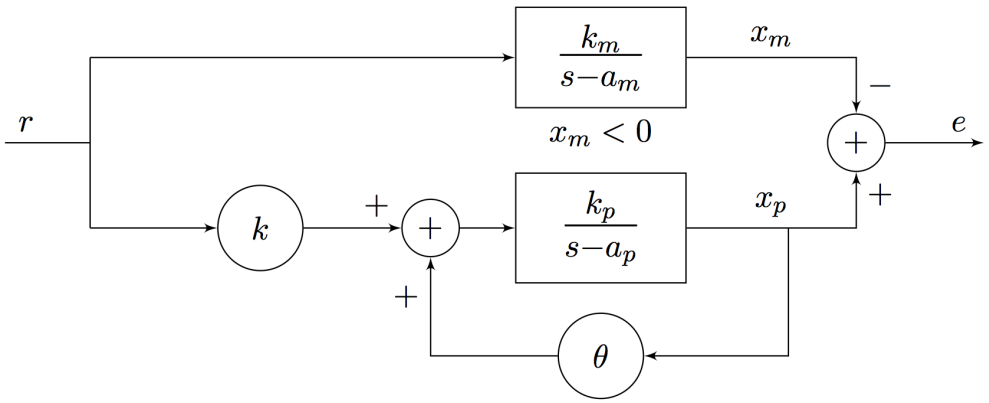

Certainty Equivalence Principle

Step 1: Algebraic Part: Find a solution to the problem when parameters are known.

Step 2: Analytic Part: Replace the unknown parameters by their estimates. Ensure stable and convergent behavior.

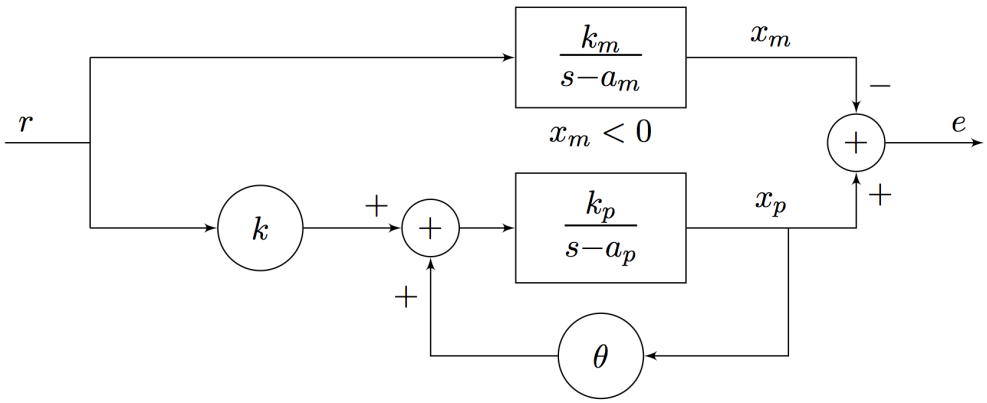

Step 1: $u(t) = \theta_c x_p + k_c r$, choose θ_c, k_c so that closed-loop transfer function matches the reference model transfer function.

Certainty Equivalence Principle

Step 1: Algebraic Part: Find a solution to the problem when parameters are known.

Step 2: Analytic Part: Replace the unknown parameters by their estimates. Ensure stable and convergent behavior.

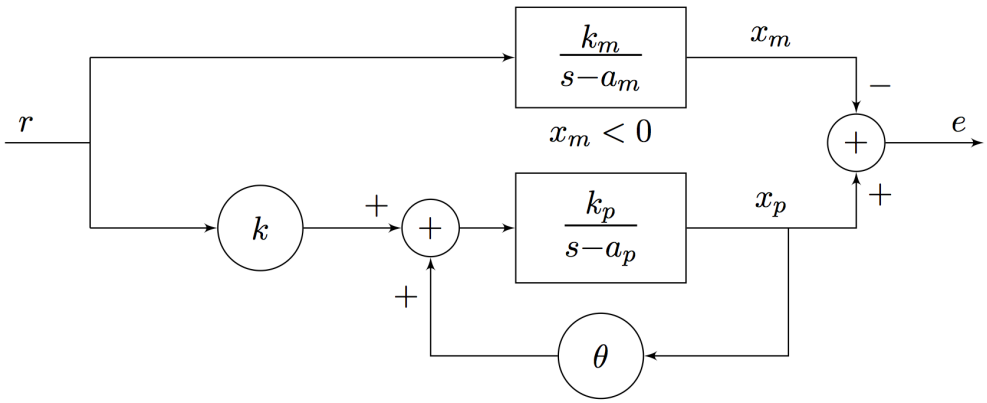

Step 1: $u(t) = \theta_c x_p + k_c r$, choose θ_c, k_c so that closed-loop transfer function matches the reference model transfer function.

Desired Parameters: $\theta_c = \theta^*, \qquad k_c = k^*$

$$\theta^* = \frac{a_m - a_p}{k_p}, \qquad k^* = \frac{k_m}{k_p}$$

Certainty Equivalence Principle - Step 2

Step 2: Analytic Part: Replace the unknown parameters by their estimates. Ensure stable and convergent behavior.
From Step 1, we have

$$u(t) = \theta^* x_p + k^* r, \qquad \theta^* = \frac{a_m - a_p}{k_p}, \qquad k^* = \frac{k_m}{k_p}$$

Certainty Equivalence Principle - Step 2

Step 2: Analytic Part: Replace the unknown parameters by their estimates. Ensure stable and convergent behavior.
From Step 1, we have

$$u(t) = \theta^* x_p + k^* r, \qquad \theta^* = \frac{a_m - a_p}{k_p}, \qquad k^* = \frac{k_m}{k_p}$$

Replace θ^* and k^* by their estimates $\theta(t)$ and $k(t)$.

Certainty Equivalence Principle - Step 2

Step 2: Analytic Part: Replace the unknown parameters by their estimates. Ensure stable and convergent behavior.
From Step 1, we have

$$u(t) = \theta^* x_p + k^* r, \qquad \theta^* = \frac{a_m - a_p}{k_p}, \qquad k^* = \frac{k_m}{k_p}$$

Replace θ^* and k^* by their estimates $\theta(t)$ and $k(t)$.

$$u(t) = \theta(t) x_p + k(t) r$$
$$\dot{\theta}(t) = ?? \qquad \dot{k}(t) = ??$$

Certainty Equivalence Principle - Step 2

Adaptive control input:

$$u(t) = \theta(t)x_p + k(t)r$$

Closed-loop Equations:

$$\dot{x}_p = a_p x_p + k_p u(t)$$

Certainty Equivalence Principle - Step 2

Adaptive control input:

$$u(t) = \theta(t)x_p + k(t)r$$

Closed-loop Equations:

$$\begin{aligned} \dot{x}_p &= a_p x_p + k_p u(t) \\ &= a_p x_p + k_p \big[\theta(t)x_p + k(t)r\big] \end{aligned}$$

Certainty Equivalence Principle - Step 2

Adaptive control input:

$$u(t) = \theta(t)x_p + k(t)r$$

Closed-loop Equations:

$$\begin{aligned}
\dot{x}_p &= a_p x_p + k_p u(t) \\
&= a_p x_p + k_p \big[\theta(t)x_p + k(t)r\big] \\
&= \big[a_p + k_p\theta^* - k_p\theta^* + k_p\theta(t)\big]x_p + k_p\big[k(t) - k^* + k^*\big]r
\end{aligned}$$

Certainty Equivalence Principle - Step 2

Adaptive control input:

$$u(t) = \theta(t)x_p + k(t)r$$

Closed-loop Equations:

$$\begin{aligned}
\dot{x}_p &= a_p x_p + k_p u(t) \\
&= a_p x_p + k_p\big[\theta(t)x_p + k(t)r\big] \\
&= \big[a_p + k_p\theta^* - k_p\theta^* + k_p\theta(t)\big]x_p + k_p\big[k(t) - k^* + k^*\big]r \\
&= a_m x_p + k_m r + k_p\widetilde{\theta}(t)x_p + k_p\tilde{k}(t)r
\end{aligned}$$

Certainty Equivalence Principle - Step 2

Adaptive control input:

$$u(t) = \theta(t)x_p + k(t)r$$

Closed-loop Equations:

$$\begin{aligned}
\dot{x}_p &= a_p x_p + k_p u(t) \\
&= a_p x_p + k_p\big[\theta(t)x_p + k(t)r\big] \\
&= \big[a_p + k_p\theta^* - k_p\theta^* + k_p\theta(t)\big]x_p + k_p\big[k(t) - k^* + k^*\big]r \\
&= a_m x_p + k_m r + k_p\widetilde{\theta}(t)x_p + k_p\tilde{k}(t)r
\end{aligned}$$

Reference Model:

$$\dot{x}_m = a_m x_m + k_m r$$

Certainty Equivalence Principle - Step 2

Adaptive control input:

$$u(t) = \theta(t)x_p + k(t)r$$

Closed-loop Equations:

$$\begin{aligned}
\dot{x}_p &= a_p x_p + k_p u(t) \\
&= a_p x_p + k_p\big[\theta(t)x_p + k(t)r\big] \\
&= \big[a_p + k_p\theta^* - k_p\theta^* + k_p\theta(t)\big]x_p + k_p\big[k(t) - k^* + k^*\big]r \\
&= a_m x_p + k_m r + k_p\widetilde{\theta}(t)x_p + k_p\tilde{k}(t)r
\end{aligned}$$

Reference Model:

$$\dot{x}_m = a_m x_m + k_m r$$

Error model:

$$\dot{e} = a_m e + k_p\widetilde{\theta}(t)x_p + k_p\tilde{k}(t)r$$

Certainty Equivalence Principle - Step 2

Step 2: Analytic Part: Replace the unknown parameters by their estimates. Ensure stable and convergent behavior.

From Step 1, we have

$$u(t) = \theta^* x_p + k^* r, \qquad \theta^* = \frac{a_m - a_p}{k_p}, \qquad k^* = \frac{k_m}{k_p}$$

Certainty Equivalence Principle - Step 2

Step 2: Analytic Part: Replace the unknown parameters by their estimates. Ensure stable and convergent behavior.
From Step 1, we have

$$u(t) = \theta^* x_p + k^* r, \qquad \theta^* = \frac{a_m - a_p}{k_p}, \qquad k^* = \frac{k_m}{k_p}$$

Replace θ^* and k^* by their estimates $\theta(t)$ and $k(t)$.

Certainty Equivalence Principle - Step 2

Step 2: Analytic Part: Replace the unknown parameters by their estimates. Ensure stable and convergent behavior.
From Step 1, we have

$$u(t) = \theta^* x_p + k^* r, \qquad \theta^* = \frac{a_m - a_p}{k_p}, \qquad k^* = \frac{k_m}{k_p}$$

Replace θ^* and k^* by their estimates $\theta(t)$ and $k(t)$.

$$u(t) = \theta(t) x_p + k(t) r$$

$$\dot{e} \quad = \quad a_m e + k_p \widetilde{\theta}(t) x_p + k_p \tilde{k}(t) r$$

Certainty Equivalence Principle - Step 2

Step 2: Analytic Part: Replace the unknown parameters by their estimates. Ensure stable and convergent behavior.
From Step 1, we have

$$u(t) = \theta^* x_p + k^* r, \qquad \theta^* = \frac{a_m - a_p}{k_p}, \qquad k^* = \frac{k_m}{k_p}$$

Replace θ^* and k^* by their estimates $\theta(t)$ and $k(t)$.

$$u(t) = \theta(t) x_p + k(t) r$$

$$\begin{aligned} \dot{e} &= a_m e + k_p \widetilde{\theta}(t) x_p + k_p \tilde{k}(t) r \\ &= a_m e + k_p \widetilde{\overline{\theta}}^T(t) \omega \end{aligned}$$

$$\omega = \begin{bmatrix} x_p \\ r \end{bmatrix}, \quad \widetilde{\overline{\theta}} = \begin{bmatrix} \widetilde{\theta}(t) \\ \tilde{k}(t) \end{bmatrix}$$

Error Model 3

$$\dot{e} = a_m e + k_p \widetilde{\theta}(t) x_p + k_p \tilde{k}(t) r$$

Error Model 3

$$\begin{aligned}\dot{e} &= a_m e + k_p \widetilde{\theta}(t) x_p + k_p \tilde{k}(t) r \\ &= a_m e + k_p \widetilde{\overline{\theta}}^T(t)\omega\end{aligned}$$

$$\omega = \begin{bmatrix} x_p \\ r \end{bmatrix}, \quad \widetilde{\overline{\theta}} = \begin{bmatrix} \widetilde{\theta}(t) \\ \tilde{k}(t) \end{bmatrix}$$

Error Model 3

$$\begin{aligned}\dot{e} &= a_m e + k_p \widetilde{\theta}(t) x_p + k_p \tilde{k}(t) r \\ &= a_m e + k_p \widetilde{\overline{\theta}}^T(t)\omega\end{aligned}$$

$$\omega = \begin{bmatrix} x_p \\ r \end{bmatrix}, \quad \widetilde{\overline{\theta}} = \begin{bmatrix} \widetilde{\theta}(t) \\ \tilde{k}(t) \end{bmatrix}$$

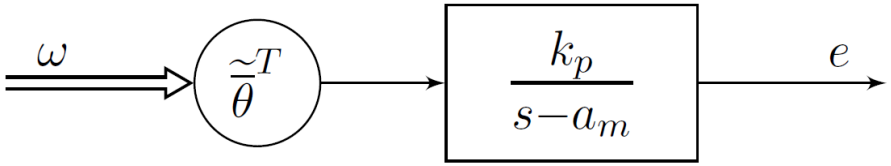

Suggested Reading

Chapter 2: 2.2, 2.3, 2.4
Chapter 3: 3.3